IW-RS316-02M

User's Manual

Table of Content

PREFACE P.2

SAFETY INFORMATION P.2

SPECIFICATIONS P.4

1 Product Introduction

1.1 Box Content P.5

1.2 General Information P.6

1.2.1 Front Panel Controls and Indicators P.7

1.2.2 Rear Panel Configuration P.8

2 Hardware Installation

2.1 Removing and Installing a Hard Drive P.9

2.1.1 Installing a Hard Drive P.9

2.1.2 Removing a Hard Drive P.9

2.2 Removing and Installing Top Cover P.10

2.3 Removing and Installing a Fan Module P.11

2.3.1 Removing a Fan Module P.11

2.3.2 Installing a Fan Module P.11

2.4 Removing and Installing a PSU Module P.12

2.4.1 Removing a PSU Module P.12

2.4.2 Installing a PSU Module P.13

2.5 Installing Slide Rail P.13

2.5.1 Identifying the slide Rail P.13

2.5.2 Take out the inner rail and slide the intermediate rail back P.13

2.5.3 Attach the inner rail to the chassis P.14

2.5.4 Mount the rail bracket to the cabinet P.14

2.5.5 Insert the chassis to the cabinet P.15

2.6 Installing Motherboard P.16

2.7 Connecting Cable P.17

3 Backplane Introduction P.18

4 Compatibility Lists P.20

5 Q&A P.20

6 Technical Support P.23

PREFACE

Thank you for choosing In Win IW-RS316-02M. This manual is written for system technicians who are responsible for installation, troubleshooting, managing, and repairing this server chassis. This document provides the overview of all the features of the chassis, a list of accessories or other components you may need to finish the installation, troubleshooting methods, and instructions of adding and removing components on the In Win IW- RS316-02M. For the latest version of this manual, you may visit In Win's server website to download the latest updated version.

SAFETY INFORMATION

To ensure safe and smooth operation of your In Win IW- RS316-02M, it is essential that you choose an appropriate location for the system, provide an appropriate operating environment, and adequate power for all components of the system. As you plan for installation, follow the guidelines below to ensure that the system and its environment are safely and appropriately positioned for efficient operation and service. Your system should be installed and serviced only by technically qualified persons.

Environment selection: The system is designed to operate in a typical office environment. The location should be a clean, dry, and free of airborne particles; a well-ventilated room and away from sources of heat including direct sunlight and radiators; it should keep the sources of vibration or physical shock away; the space should be with a properly grounded wall outlet, and with sufficient space to access the power supply cords. The operation environment temperature should be around 0°C to 40°C (32°F to 104°F).

Heed safety instructions: Before working with In Win IPC/Storage server/ System products, we strongly recommend you are using this guide as a reference and follow the safety instructions. The instructions in this manual will help you ensure and maintain compliance with existing product certifications and approvals. Follow the described, regulated components mentioned in this manual. Use of non UL listing products or other regulatory did not approvals will make non-compliance with product regulations in the region(s) in which the product is sold.

System power on/off: The power button DOES NOT totally turn off the system AC power. To remove the power of system, you have to unplug the AC power cord from the outlet or system's power supply units. Make sure the power cord is unplugged before you open the chassis, add, or remove any components.

Hazardous conditions, devices and cables: Hazardous electrical conditions usually present on power supply units, and communication cables. Disconnect the power cord, and any other device which attached to the server before opening the case. Otherwise, it will raise the risk of personal injury or equipment damage.

Electrostatic discharge (ESD) and ESD protection: In most cases, ESD damages disk drives, electronic boards, and other parts. We recommend that you work the installation only at an ESD free space. If the situation does not allow, perform ESD protection actions by wearing an anti-static wrist strap attached to ground any unpainted metal surface on your server during your operation.

Installing or removing jumpers: A jumper is a short length of conductor used to close, open or bypass part of an electronic circuit. Jumpers on In Win backplane have a small tab on top that you can pick up with your fingertips. Grip the jumper carefully, and plug the jumper to cover the jumper pins on the backplane. Once you need to remove the jumper, gripping the jumper, and carefully pull out without squeezing.

CAUTION

To avoid damage and prove your safety, please notice and following the terms listed below:

1. No to populate hard drives and turn on the power before the system is settle down.
2. Tighten or loosen all the screws, please use screw driver to operate.
3. Apply the correct screws which packed in the accessories box.
4. For your safety, it requires at least two persons lift, and place the unit.
5. Before mounting the unit to the cabinet, make sure the rail is installed correctly.
6. When installing and removing any module or parts, please operate by the handles.

SPECIFICATIONS

Model Name	IW-RS316-02M
Standard	EIA-RS310D
M/B Form Factor	ATX (12” x 9.6”), ATX(12” x10”), EEB(12” x 13”)
Dimensions (D x W x H)	625 x 482.6 x 131 mm (24" x 19" x 5.25")
Drive Bay	External: Slim ODD x 1, Hot-Swap 3.5" x 16 or 2.5" x 16, 2.5" HDD Hot-Swap x 2 (Optional) Internal: 2.5” HDD x 4
Power Supply	Supports ▪ Form Factor: Factor: Single or 1U 1+1 Redundant ▪ Watt: Single 500W, Redundant up to 875W
Indicator	Power Status, HDD, LANs, System Fail Activity LEDs
Front Control Panel	Power Switch, ID Switch, System Reset, NMI, USB 3.0 x 2
Backplane	Mini-SAS (6Gb/s Supported) or Mini-SAS HD (12Gb/s Supported) or Mini-SAS HD (12Gb/s Supported with expander function)
Cooling Fan	Supports 120 x 38 mm PWM Hot-Swap Fan x 3 60 mm PWM Rear Fan x 2 (Optional)
Expansion Slot	Full Height PCI Slot x 7
Material	Material: SGCC Thickness: 1.2 mm
Slide Rail	28” Ball-bearing slide rail

1 Product Introduction

1.1 Box Content

When you open the carton box of IW-RS316-02M, the contents should include:

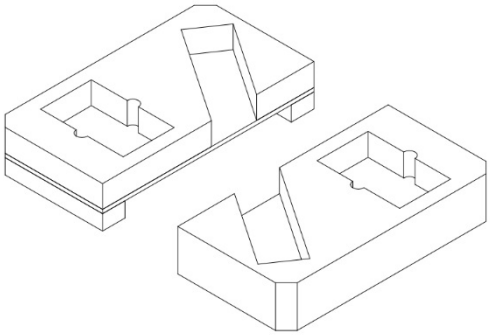

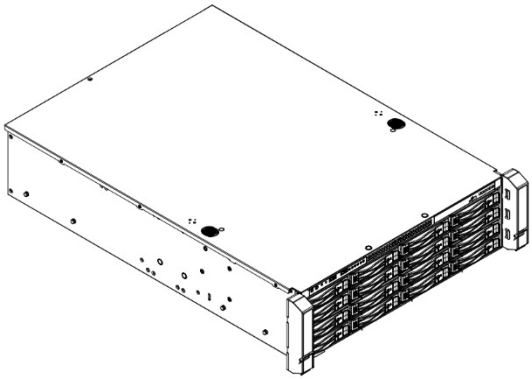

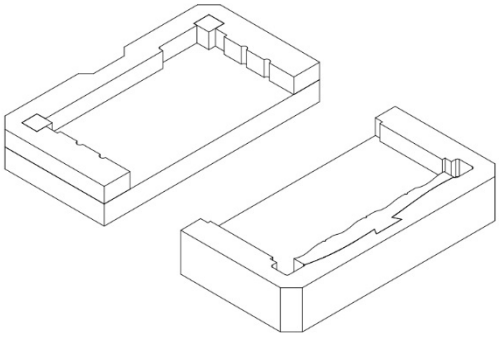

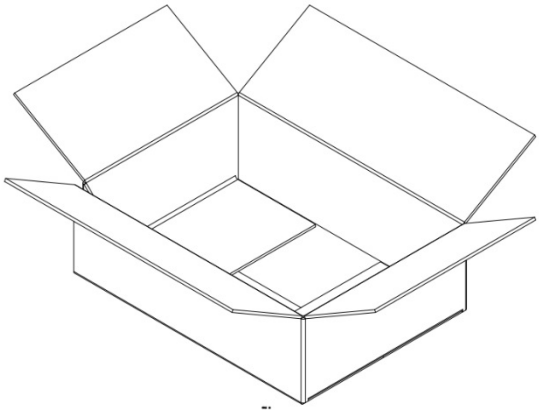

1.2 General Information

When you open the top cover should be like the diagram shows.

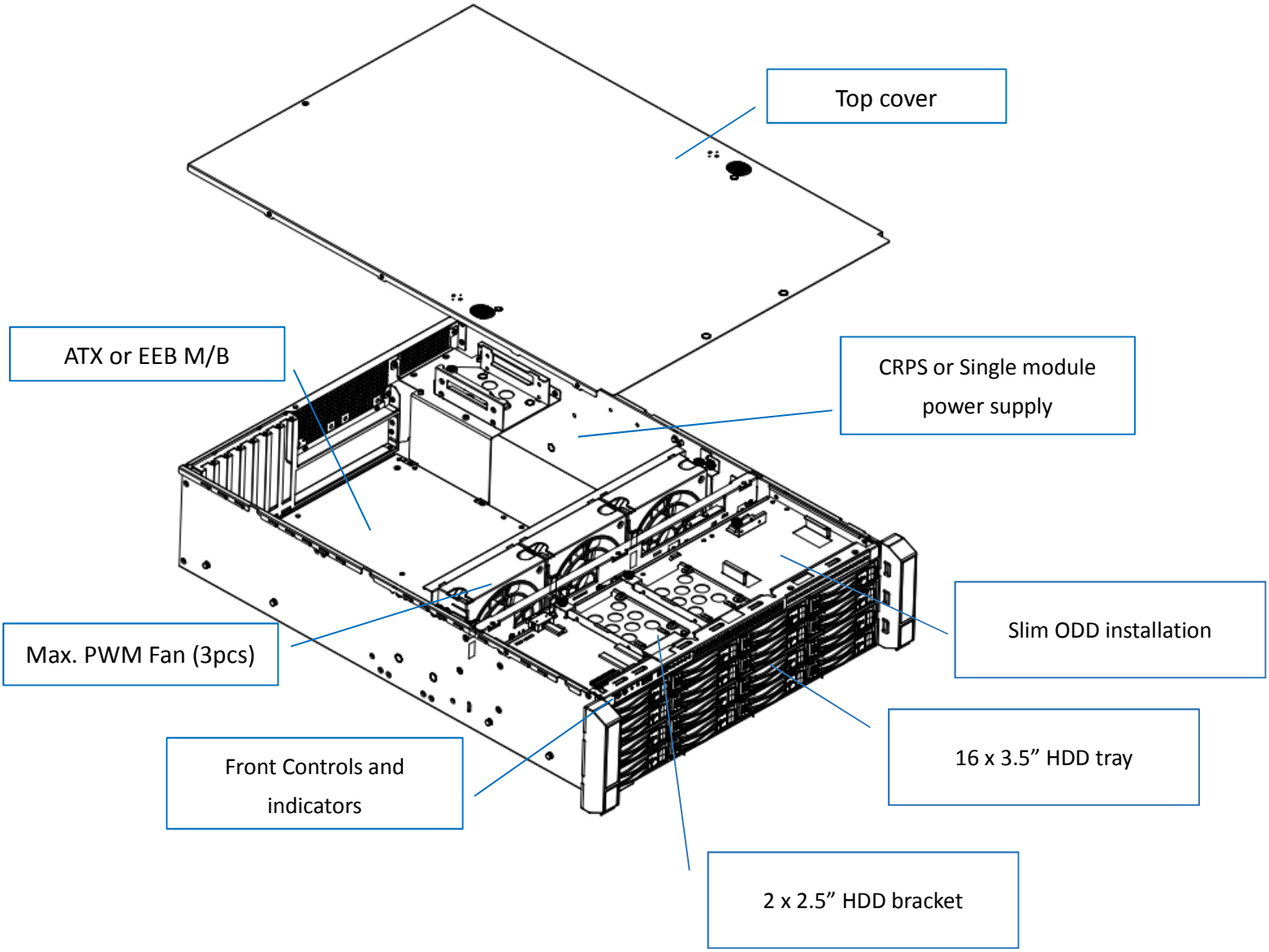

1.2.1 Front Panel Controls and Indicators

After unlock and removing the front cover, you can see the 16 disk bays, and the control panel, USB IO ports and indicators on the handles.

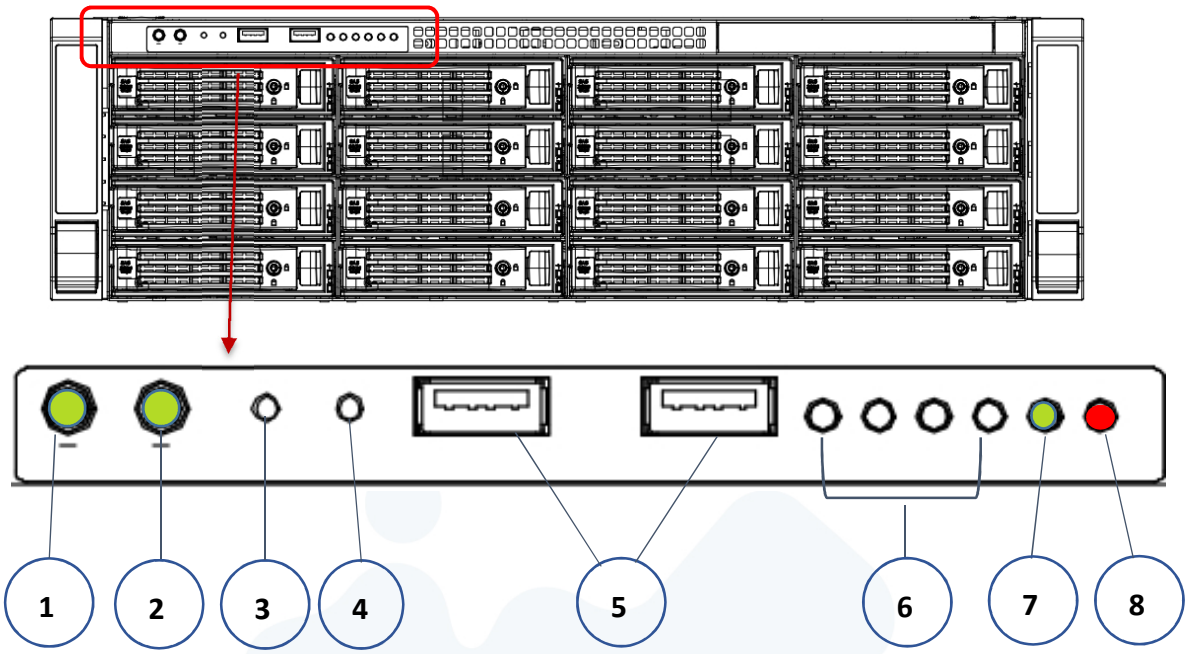

No.	Name	Color	Status	Description
1	Chassis ID Button with LED	Blue	Solid on	Press the button to activate system identification
2	Power ON/OFF Button with LED	Blue	Solid on	System power on
			Off	System power off
3	NMI Button	No LED function		Press the button to activate user define
4	System Reset Button	No LED function		Press the button to activate system reset
5	USB3 Connector	No LED function		USB devices connection
6	LAN LED	Amber	Blinking	Link between system and network
			Off	No date transmission or receiving is occurring
7	Hard Disk LED	Green	Blinking	System HDD accessing
8	System Fail LED	Amber	Solid on	System Fault
		Green	Solid on	System Ok

1.2.2 Rear Panel Configuration

The rear side of IW-RS316-02M contains space of AC power source, system IO, and an expansion cards slot.

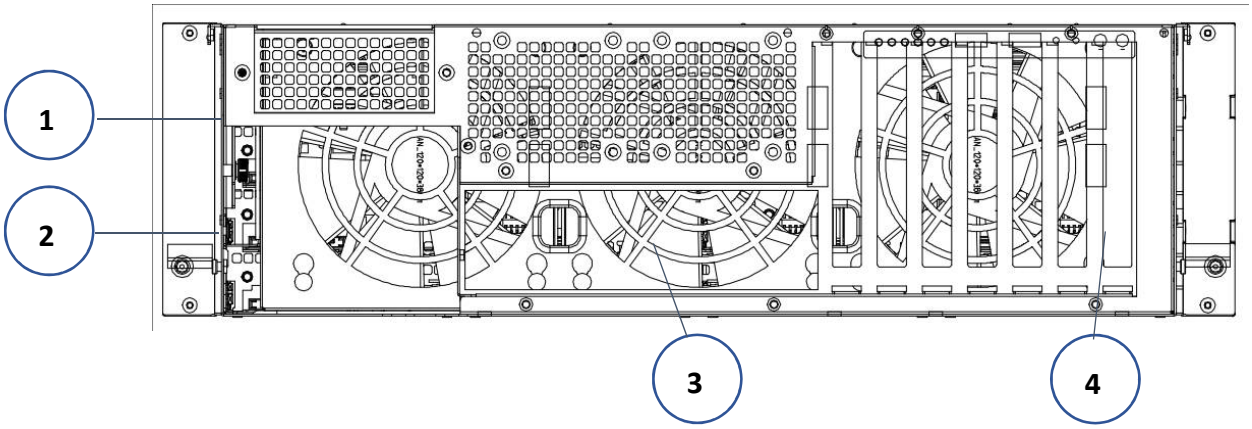

No.	Name	Description
1	PSU Bracket	The bracket is for holding single PSU. For redundant PSU, remove this cover and replace as redundant PSU housing case bracket.
2	Power Supply Window	This window is for installing single PSU, please reference In-Win compatibility list to select the compatible models.
3	System I/O (depend on M/B specification)	The I/O shield should come with motherboard or provided by motherboard vendors
4	Full Height PCI Slot x 7	The slot support 120mm high profile cards. The bracket should be removed before using.

2 Hardware Installation

2.1 Removing and Installing a Hard Drive

In Win IW-RS316-02M has 16 external hot-swap disk bays, which support both 3.5” hard drives, 2.5” hard drives, and 2.5” SSDs. Also, IW-RS316-02M supports 4 internal 2.5” hard drives or SSDs for building system OS.

2.1.1 Installing a Hard Drive

Step 1: Press the release button then pull outward the disk tray

Step 2: Populate the hard drive on the tray with 4 screws which you can find in the accessory box.

Step 3: Push back the tray back to the disk bay, and push back the lever until you hear “click”

Step 1

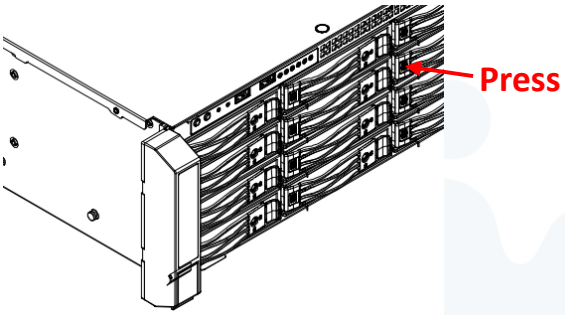

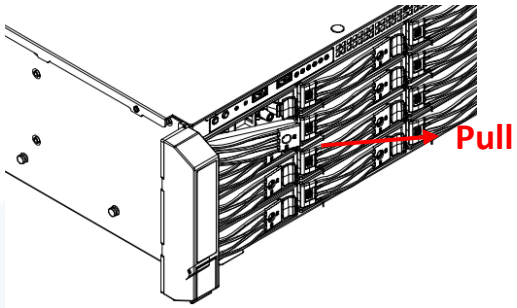

Step 2

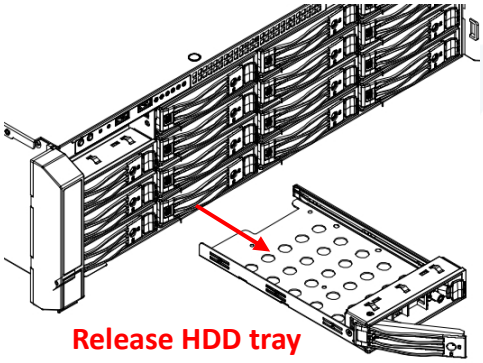

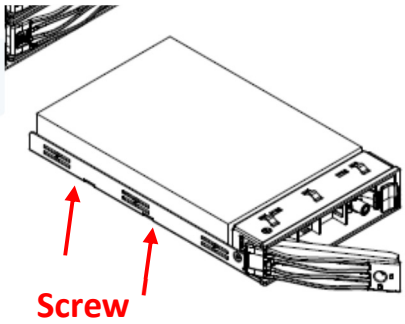

Step 3

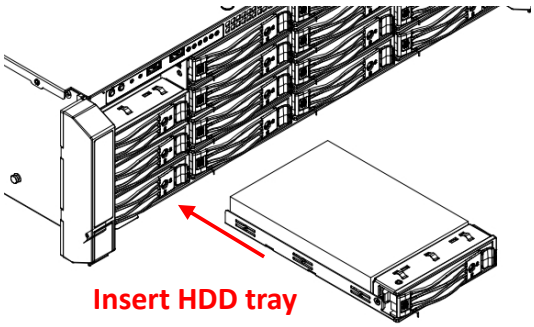

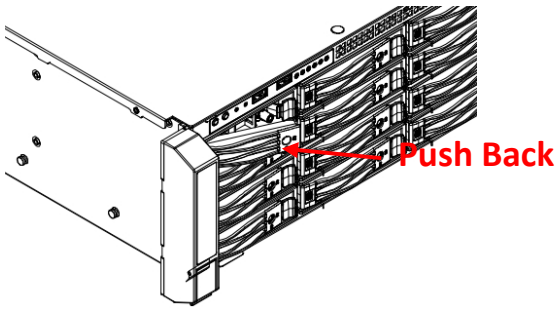

2.1.2 Removing a Hard Drive

Step 1: Press the release button then pull outward the disk tray.

Step 2: Loosen the 4 screws and unmount the hard drive.

Step 1

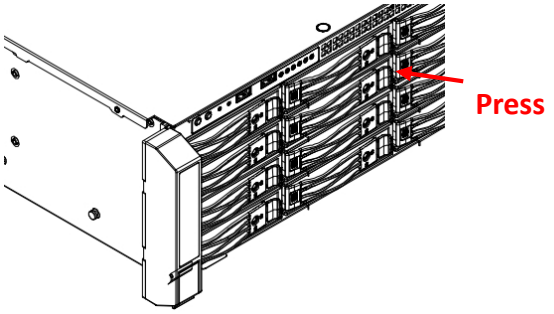

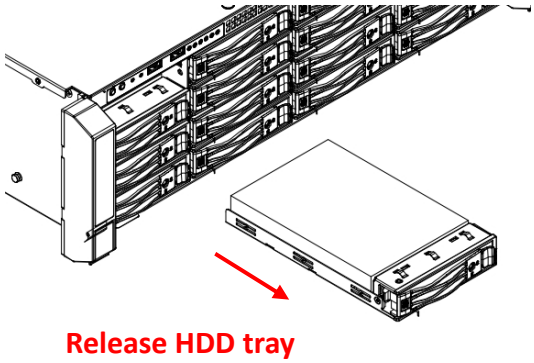

Step 2

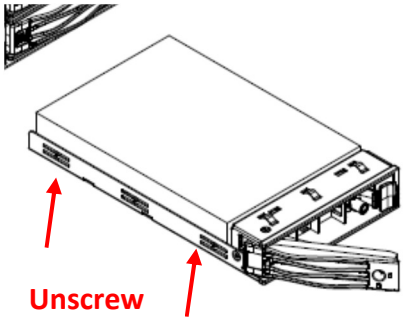

2.1.3 Installing 2.5” 2bay SSD module

Step 1: Remove the slot bracket to left the space for the module.

Step 2: Place the module to the chassis and use screw to fix the module form side wall and slot frame.

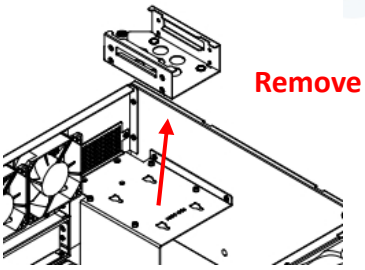

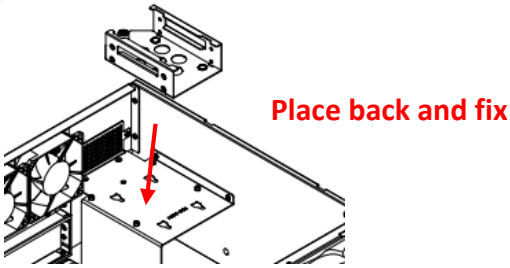

Step 3: Push the tag and pull out the tray to populate the SSD, and put back to finish the installation.

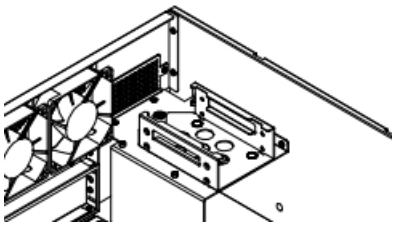

2.2 Removing and placing Top Cover

Step 1: Release the screw on the back-end of cover, and press inward the blue buttons then push backward the top cover.

Step 2: Lift the top cover to remove.

Step 3: To place the top cover, place the cover on to the chassis, and make sure the wedges are in the right location.

Step 4: Push forward the cover and make sure the clip clicks, then screw up to fix the cover.

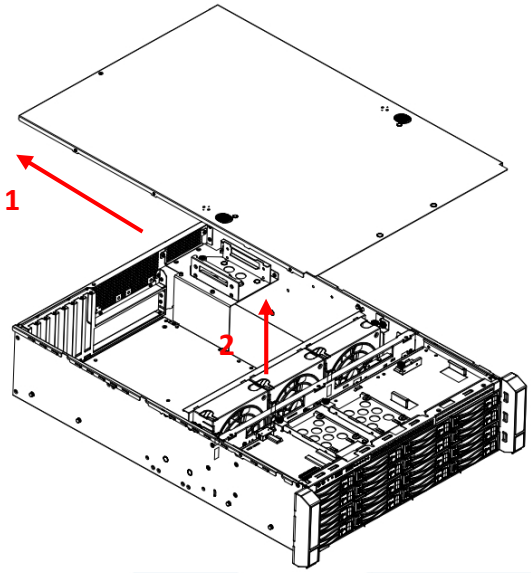

2.3 Removing and Installing the fan wall

The fan module of IW-RS316-02M is flexible which you can move forward or backward to optimize the cooling efficiency. Removing the fan wall before posting the motherboard to get more space for the processing. After the motherboard and components are installed, using the bracket to organize the cable sets.

2.3.1 Removing a fan wall

Step 1: Unplug the fans' power cable and remove the fan units

Step 2: Loosen the thumb screw and lift the fan wall from the chassis

Step 1

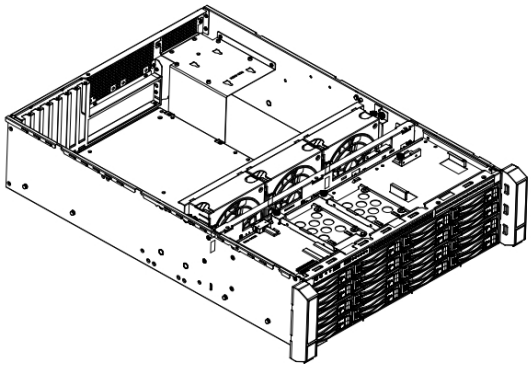

Step 2

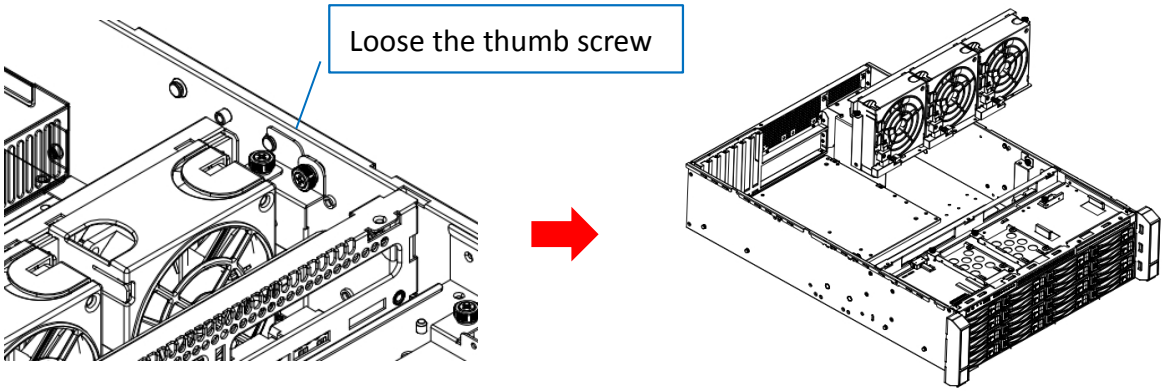

2.3.2 Moving and installing the fan wall (Repeat the actions of 2.3.1)Step 1: Loosen the thumb

Step 1

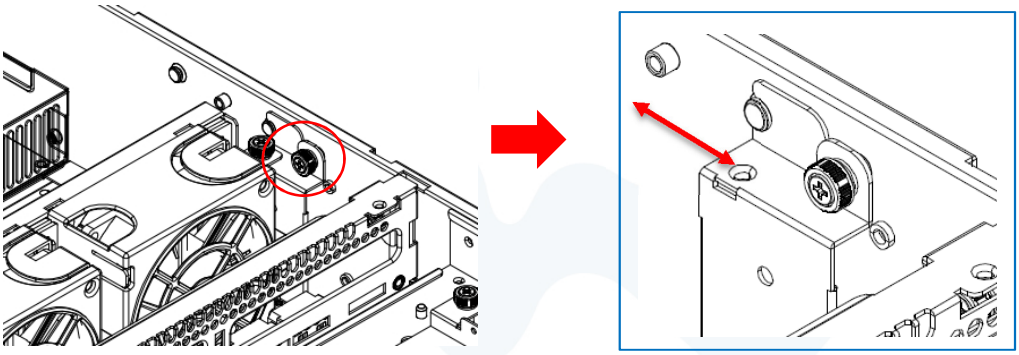

Step 2

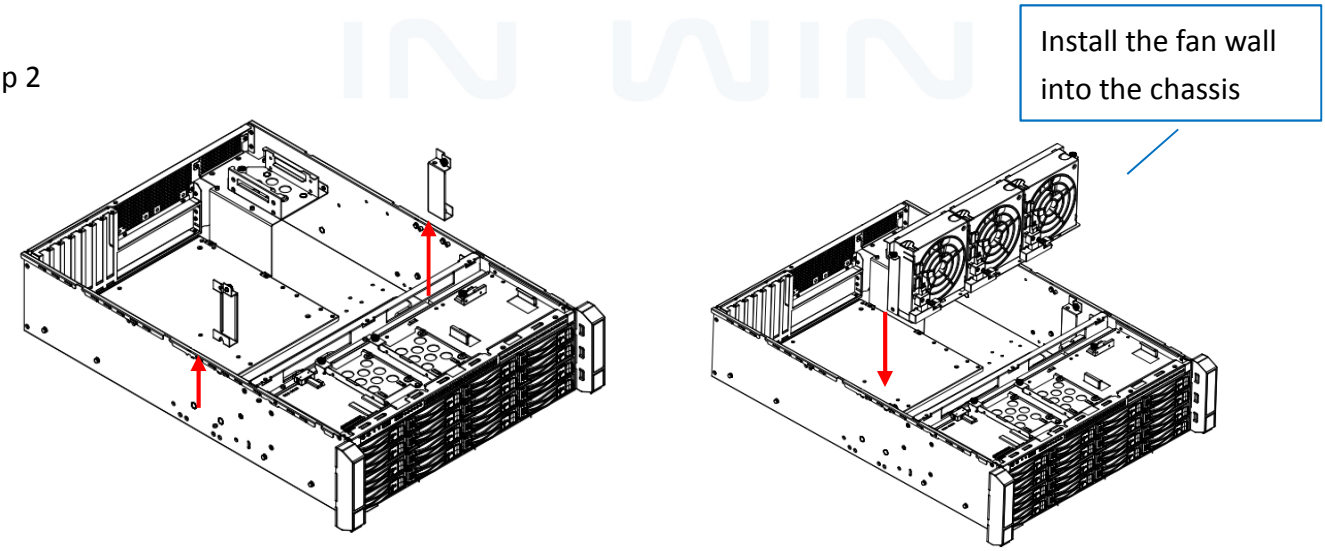

2.4 Removing and Installing a PSU

In Win IW-RS316-02M supports single and redundant power supply unit. Users can select power supply according to the environment's requirements.

Note: The different PSU needs different rear and side bracket. The accessory box includes the bracket sets for supporting models.

2.4.1 Installing Single PSU

Step 1: Post the rear bracket to the chassis

Step 2: Place the PSU to the rear right corner of the chassis and make sure the screw holes meet the chassis frame and bracket.

Step 1

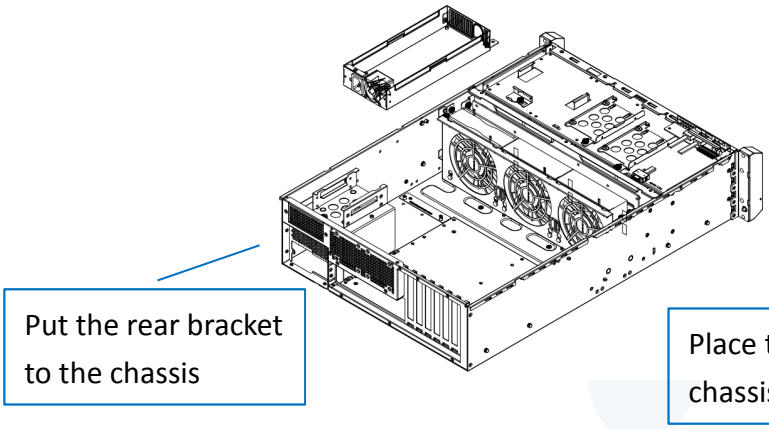

Step 2

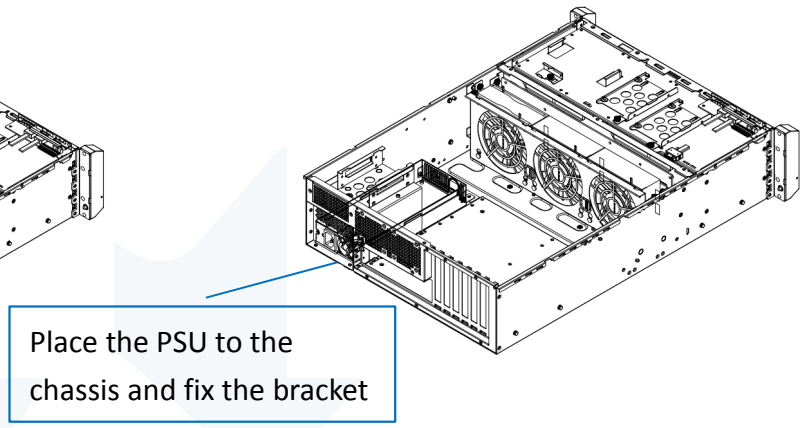

2.4.2 Installing Redundant PSU

Step 1: Unscrew and remove the rear frame at the rear right position of the chassis.

Step 2: Measure the length of the PSU housing case, and post the rear bracket to the chassis.

Step 3: Mount the side bracket to the PSU housing case and fix with flat-head screw from the accessory box.

Step 4: Use screws from the accessory box to fix the PSU housing case.

Step 5: Insert the PSU modules and push the modules to the end until hearing a click.

Step 1

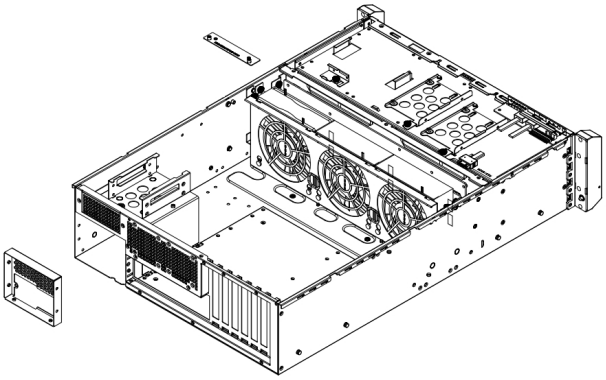

Step 2

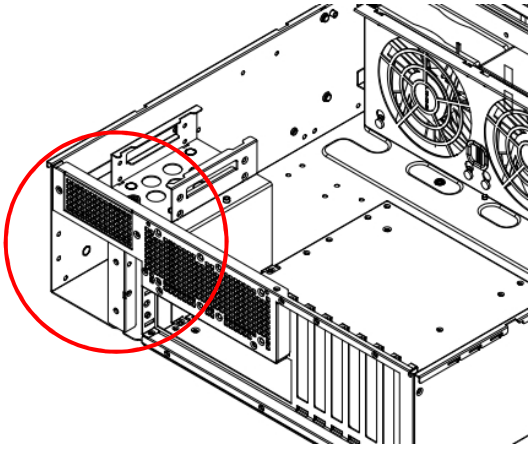

Step 3 to Step 5

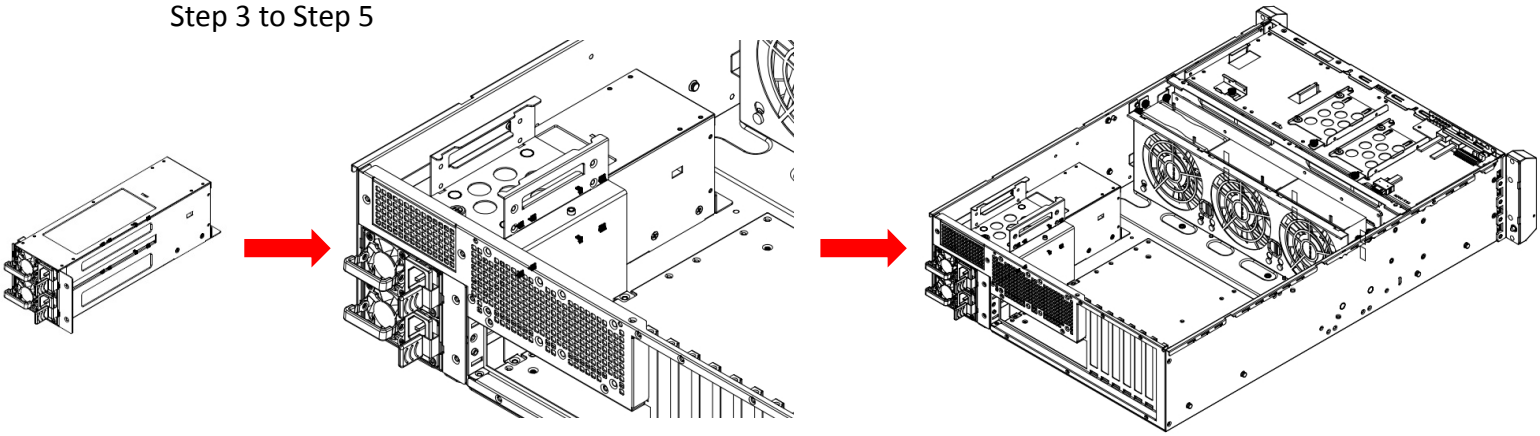

2.5 Installing a Slide Rail

In Win IW-RS316-02M is a rackmount model, which support EIA-RS310D standard cabinet and chassis rack. In Win provides standard slide rail to let users mount the chassis on to the cabinet.

2.5.1 Identifying the sections of the Slide Rail

2.5.2 Installing a Slide Rail

Step 1: Release the inner rail from the slide

Step 2: Mount the inner rails onto the chassis by the direction which the arrows show.

Step 3: Install the outer rails and the brackets onto the rack.

Step 1

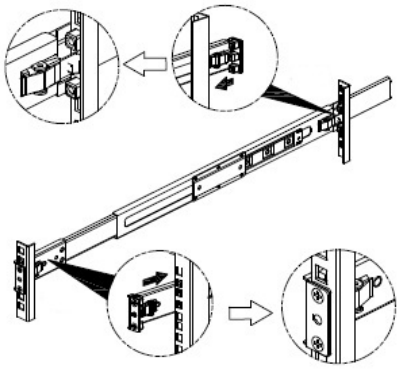

Step 2

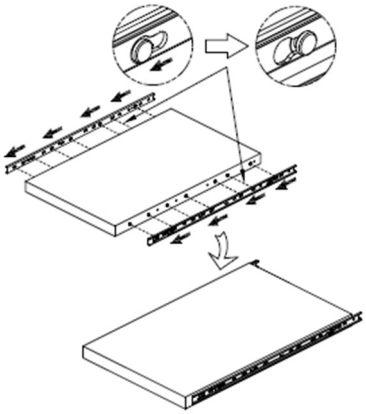

Step 3

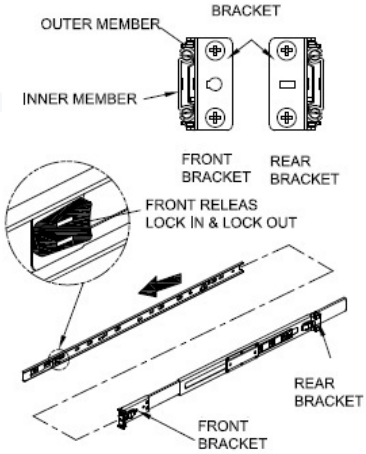

2.5.3 Mount the chassis onto the cabinet

Step1: Make sure the ball bearing retainer is at the forefront.

Step2: Insert the inner rail to the outer rail which has already locked up on the cabinet.

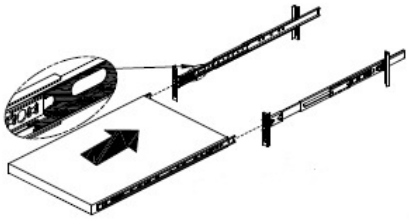

Step3: Mount the inner rail onto the chassis by the direction which the arrows show on the image.

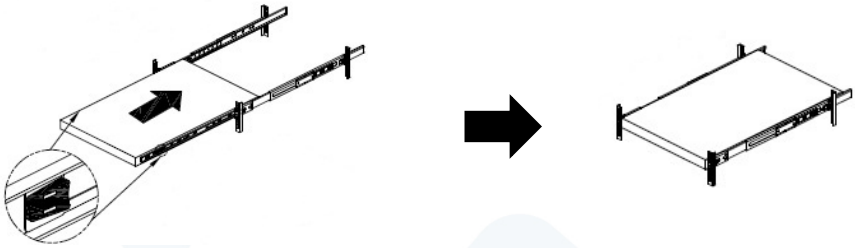

Step4: Pull up the plastic chip on the chassis' handles, and tighten the thumb screws to fix the chassis

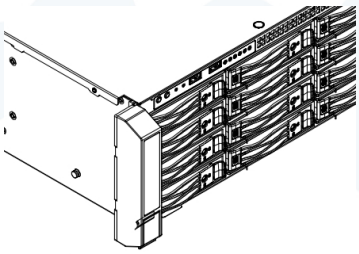

2.6 Installing Motherboard

Before installing the motherboard, please find the IO shield form your motherboard package, and install it to the system IO window 1.2.2 shows. If you cannot find the IO shield, please check with your motherboard vendor, or contact In Win for IO shield OEM service.

Step 1: Measure the motherboard location and removing the plastic dots to appear the holes.

Step 2: Install the steel pillars, which you can find in the accessories box to the holes matching the motherboard's mounting holes, you may use a flathead screw driver.

Step 3: Place the motherboard down to the chassis, and make sure the pillars' threaded holes are matching the mounting holes on the motherboard.

Step 4: Use hex screws from the accessories box to fix the motherboard in the chassis.

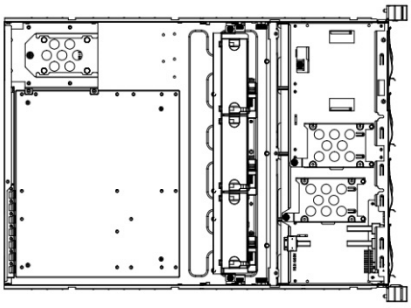

2.7 Connection Cable

2.2.1 Connecting backplane through SAS connectors

In Win IW-RS316-02M needs SAS cable connecting the backplane and your motherboard or RAID controller. In Win provides verified SAS cable for installation, please contact In Win local partners and sales to get more information.

2.7.2 Connecting LED cable, front control panel and front USB IO ports

As 1.2.1 descripts, In Win IW-RS-02M built-in a set of front control panel and USB access ports. You need to cover the connectors to the pins on the motherboard to active the functions. The pin function and location you can find from your motherboard's user guide.

USB 3.0

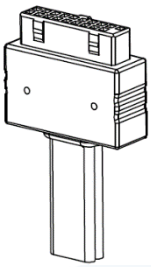

LED Connector

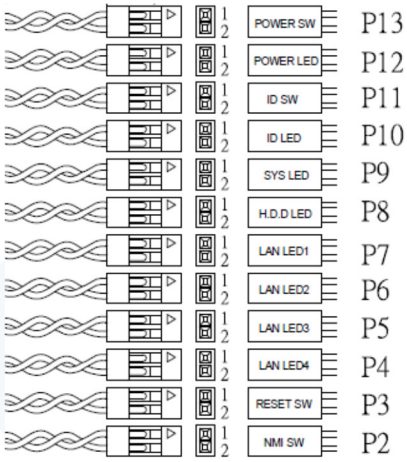

No.	Connector Name	Color	Front IO Indication
P2	NMI Switch	Black/Brown	NMI Button
P3	Reset Switch	Red/Orange	Power Reset Button with LED
P4	LAN LED 4	Yellow/Green	LAN LED
P5	LAN LED 3	Blue/Purple	LAN LED
P6	LAN LED 2	Gray/White	LAN LED
P7	LAN LED 1	Black/Brown	LAN LED
P8	HDD LED	Red/Orange	HDD Active LED
P9	System LED	Yellow/Green	System Fail LED
P10	ID LED	Blue/Purple	Chassis ID Button with LED
P11	ID Switch	Gray/White	Chassis ID Button with LED
P12	Power LED※	Black/Brown	Power ON/OFF Button with LED
P13	Power Switch	Red/Orange	Power ON/OFF Button with LED
USB	USB 3.0 Connector	Black Flat	USB 3.0

※ If the motherboard's led power source is 3-pin type, please use the 2Pin-to 3Pin convertor form the accessory box to connect.

3 Backplane Introduction

The backplane is different by order,

Please reference the backplane user guide to complete the installation. Visit In Win website:

https://www.in-win.com/en/ipc-server

The download link is at the download section of each product.

Top Side

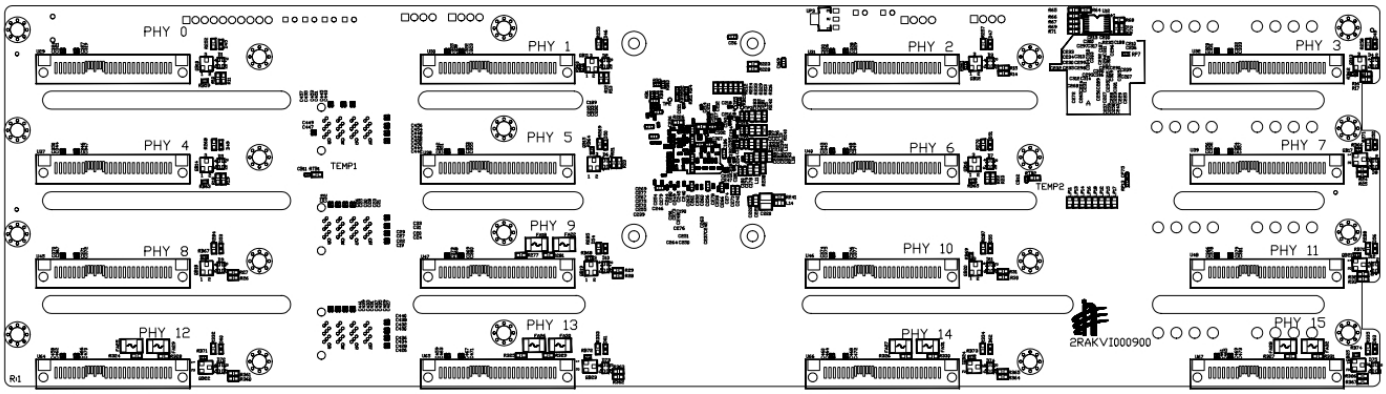

Bottom Side

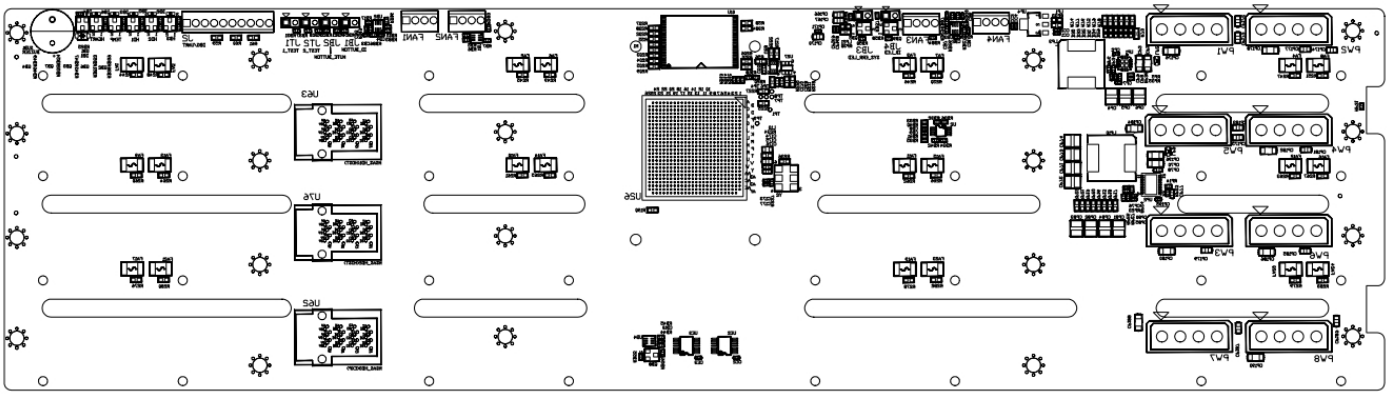

4 Compatibility Lists

To reach best performance and avoid system failure, In Win strongly recommend users choosing the components from In Win's compatibility list. All the components are tested in In Win's lab and assured the components are working well with In Win's chassis.

You can download the latest updated device compatibility list from In Win's website:

https://www.in-win.com/en/ipc-server

5 Q&A

a. What are the function of backplane?

A: The backplane is the bridge which connects the hard drives and export the signal to the motherboard. Also, backplane provides the LED signals indicating the status of the hard drives, and alarming when the system temperature is abnormal.

b. Does backplane supports 6Gb SAS?

A: In Win IW-RSXXX-02M in default is with 12Gb SAS backplane. The 12Gb SAS connector is not alignment with 6Gb SAS. In Win provides OEM/ODM service, user can contact In Win sales for customization.

c. Does the chassis support 3.5”, 2.5”, SAS and SATA drive? Can I mix the different type of drives in an enclosure?

A: In Win IW-RSXXX-02M supports both 3.5” and 2.5” form factor’s SAS/SATA disks. It allows different types of disks work together in an enclosure. Yet, to reach the best performance, we recommend following the motherboard or RAID controller vendors’ instruction deploying you hard drives to each the best performance.

d. Does the chassis support flash drive?

Any SSD supports SAS or SATA connection can be attached to the In Win IW-RSXXX-02M, but beware the NVMe SSD is not supported. We recommend referencing In Win’s compatibility list to check if your SSD is listed, or referencing the information to purchase SSD.

e. If I don’t need the front cover, can I have the standard handle?

In Win IW-RSXXX-02M supports both standard handle and bezel handle. If you would like your chassis with standard metal handle, please contact your local reseller to purchase the bezel package for replacement.

f. Do the chassis support mirrored OS disks?

In Win IW-RSXXX-02M models supports at least 2 internal disks, RS316-02M and RS424-02M have built-in 2bay hot swap module. Yet, the disk mirroring is defined by your motherboard or your RAID 1 controller card. You may check the vendor’s guide to mirror your OS disks.

g. Can it support small form factor MB such as M-ATX and Mini-ITX?

In Win IW-RSXXX-02M supports motherboard range from Mini-ITX to EEB. Unless you would like to mount a customized motherboard which not meet Intel’s standard, you will need to contact In Win partners or sales for customization service.

h. Do I need a RAID controller card to connect the backplane?

If you would like to construct a solid hardware RAID system, it is required. However, using the RAID controller card or not, is depends on your purpose and budget. We recommend discussing with In Win's channel partner for their suggestions.

i. Where can I buy the SAS cable?

6Gb SAS to 4 SATA or 6Gb SAS to 6Gb SAS are standard cable that you easily buy from many vendors. You can buy the verified cable from In Win to eliminate the compatibility issues.