IW-RS424-04

User's Manual

Table of Contents

PREFACE *1*

SAFETY INFORMATION *1*

CAUTION *2*

SPECIFICATIONS *3*

1 Product Introduction *4*

1.1 Box Contents **4**

1.2 General Information **5**

1.2.1 Front Panel Controls and Indicators 6

1.2.2 Rear Panel Configuration 8

2 Hardware Installation *9*

2.1 Removing and Installing a Hard Drive **9**

2.1.1 Installing a Hard Drive 9

2.1.2 Removing a Hard Drive 10

2.2 Removing and Inserting the Top Cover **11**

2.3 Removing and Installing the Fan Module **12**

2.3.1 Removing the Fan Module 12

2.3.2 Installing the Fan Module 12

2.4 Removing and Installing the PSU Module **13**

2.4.1 Removing the PSU Module 13

2.4.2 Installing the PSU Module 14

2.5 Installing Slide Rail **14**

2.5.1 Identifying the Slide Rail 14

2.5.2 Take out the Inner Rail and Slide the Intermediate Rail Back 15

2.5.3 Attach the Inner Rail to the Chassis 15

2.5.4 Mount the Rail Bracket to the Cabinet 16

2.5.5 Insert the Chassis to the Cabinet 17

2.6 Installing the Motherboard **18**

2.7 Connecting Cables **18**

2.7.1 Connecting expander through SAS connectors 18

2.7.2 Connecting LED, front control panel and front USB 19

3 Backplane Introduction *20*

4 Expander Board Introduction *21*

4.1 Key Features **21**

4.2 UART Usage **22**

4.2.1 UART configuration 22

4.2.2 System Revision 23

4.2.3 System Monitoring 24

4.2.4 Disk PHY Status 25

4.2.5 Firmware Update 26

5 Compatibility Lists ***29***

6 Q&A ***29***

7 Technical Support ***31***

PREFACE

Thank you for choosing In Win IW-RS424-04. This manual is written for system technicians who are responsible for installation, troubleshooting, managing and repairing this server chassis. This document provides the overview of all the features of the chassis, a list of accessories or other components you may need to finish the installation, troubleshooting methods and instructions on adding and removing components on the In Win IW- RS424-04. For the latest version of this manual, you may visit In Win's server website to download the latest updated version.

SAFETY INFORMATION

To ensure a safe and smooth operation of your In Win IW-RS424-04, it is essential that you choose an appropriate location for the system, provide an appropriate operating environment and supply an adequate amount power for all components of the system. As you plan for installation, follow the guidelines below to ensure that the system and its environment are safely and appropriately positioned for efficient operation and service. Your system should be installed and serviced only by a qualified technician.

Environment selection: The system is designed to operate in a typical office environment:

- The location should be clean, dry and free of airborne particles.
- It should be a well-ventilated room, and away from sources of heat including direct sunlight and radiators.
- It should be kept away from sources of vibration or physical shock.
- The space should be accommodated with a properly grounded wall outlet, and with sufficient space to access the power supply cords.
- The operating environment temperature should be around 0°C to 40°C (32°F to 104°F).

Heed safety instructions: Before working with In Win IPC/Storage server products, we strongly recommend you use this guide as a reference and follow the safety instructions. The instructions in this manual will help you ensure and maintain compliance with existing product certifications and approvals. Follow the described, regulated components mentioned in this manual. Use of non-UL listing products or other regulators may not comply with product regulations in the region(s) in which the product is sold.

System power on/off: The power button DOES NOT totally turn off the system AC power. To remove the power of the system, you must unplug the AC power cord from the outlet or the system's power supply units. Make sure the power cord is unplugged before you open the chassis, add or remove any components.

Hazardous conditions, devices and cables: Hazardous electrical conditions can be present on/in power supply units and their cables. Disconnect the power cord and any other device attached to the server before opening the case. Failing to follow safety procedures will increase the risk of personal injury or equipment damage.

Electrostatic discharge (ESD) and ESD protection: In most cases, ESD may damage disk drives, electronic boards and other parts. We recommend that you conduct installation only at an ESD free space. If not possible, perform ESD protection protocol by wearing an anti-static wrist straps attached to the ground on any unpainted metal surface on your server during operation.

Installing or removing jumpers: A jumper is a short length conductor used to close, open or bypass part of an electronic circuit. Jumpers on In Win backplanes have a small tab on top that you can pick up with your fingertips. Grip the jumper carefully, and plug the jumper to cover the jumper pins on the backplane. Once you need to remove the jumper, grip the jumper and carefully pull without squeezing.

CAUTION

To avoid damage and maintain your safety, please read the following terms listed below:

1. No to populate hard drives and turn on the power before the system is settles down.
   Make sure hard drives and other components are properly connected before turning on the system.
2. Tighten or loosen all the screws with a screwdriver.
3. Apply the correct screws packed in the accessory box.
4. For your safety, please have at least two people lift and place the unit.
5. Before mounting the unit to the cabinet, make sure the rail is installed correctly.
6. When installing and removing any module or part, please use the handles.

SPECIFICATIONS

Model Name	**IW-RS424-04**
Standard	EIA-RS310D
M/B Form Factor	ATX (12” x 9.6”), ATX (12” x10”), EEB (12” x 13”)
Dimensions (D x W x H) w/o Front Door	660.4 mm x 482.6 mm x 176 mm (26" x 19" x 7")
Drive Bay	External: Hot-swap 3.5” x 24 Internal: 2.5” x 2 or rear hot-swap 2.5"(7mm SSD) x 2 for OS (Optional)
Power Supply	Supports ▪ Form Factor: Platinum CRPS redundant ▪ Watt: 800W
Indicator	Power LED, LAN1/LAN2/LAN3/LAN4 LED, System LED, ID LED
Front Control Panel	Power On/Off, Reset, NMI, ID SW, USB 3.0 x 1, Mute Button
Backplane	Mini SAS HD /12Gb/s with expander
Cooling Fan	8038mm PWM fan x 3, 8038mm fan x 1 for PCI-E Modular design with anti-vibration
Expansion Slot	Full height PCI slot x 7
SAS 12G Expander	Supports LSI expander
Material	Material: SGCC Thickness: 1.0 mm
Rail Kit	Supports 30" tool-less & ball-bearing slide rail

* The actual product is subject to change without prior notice. In Win Development Inc. reserves the right to make any final modifications.

1 Product Introduction

1.1 Box Contents

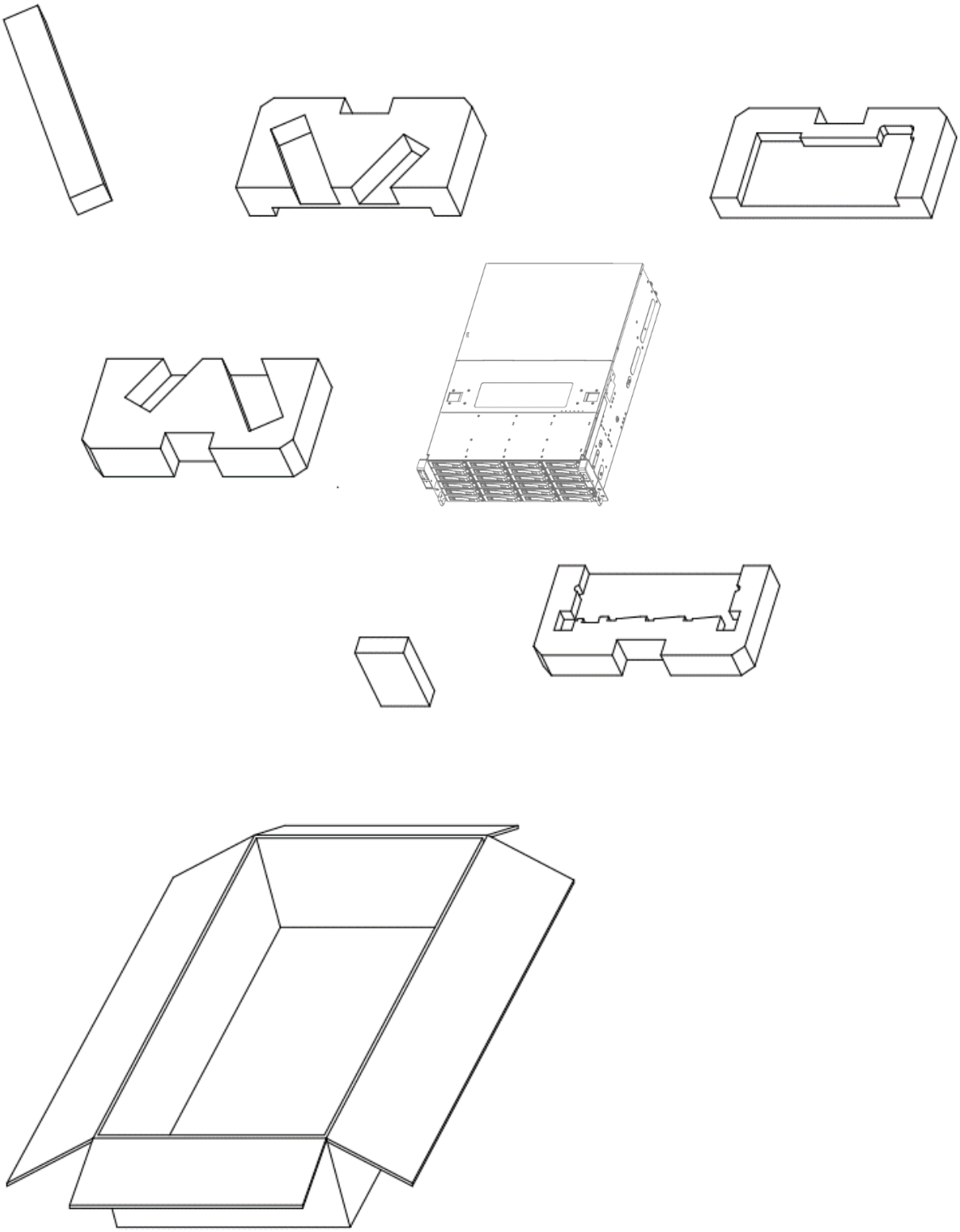

1.2 General Information

When you open the chassis, it should reflect the diagram's image.

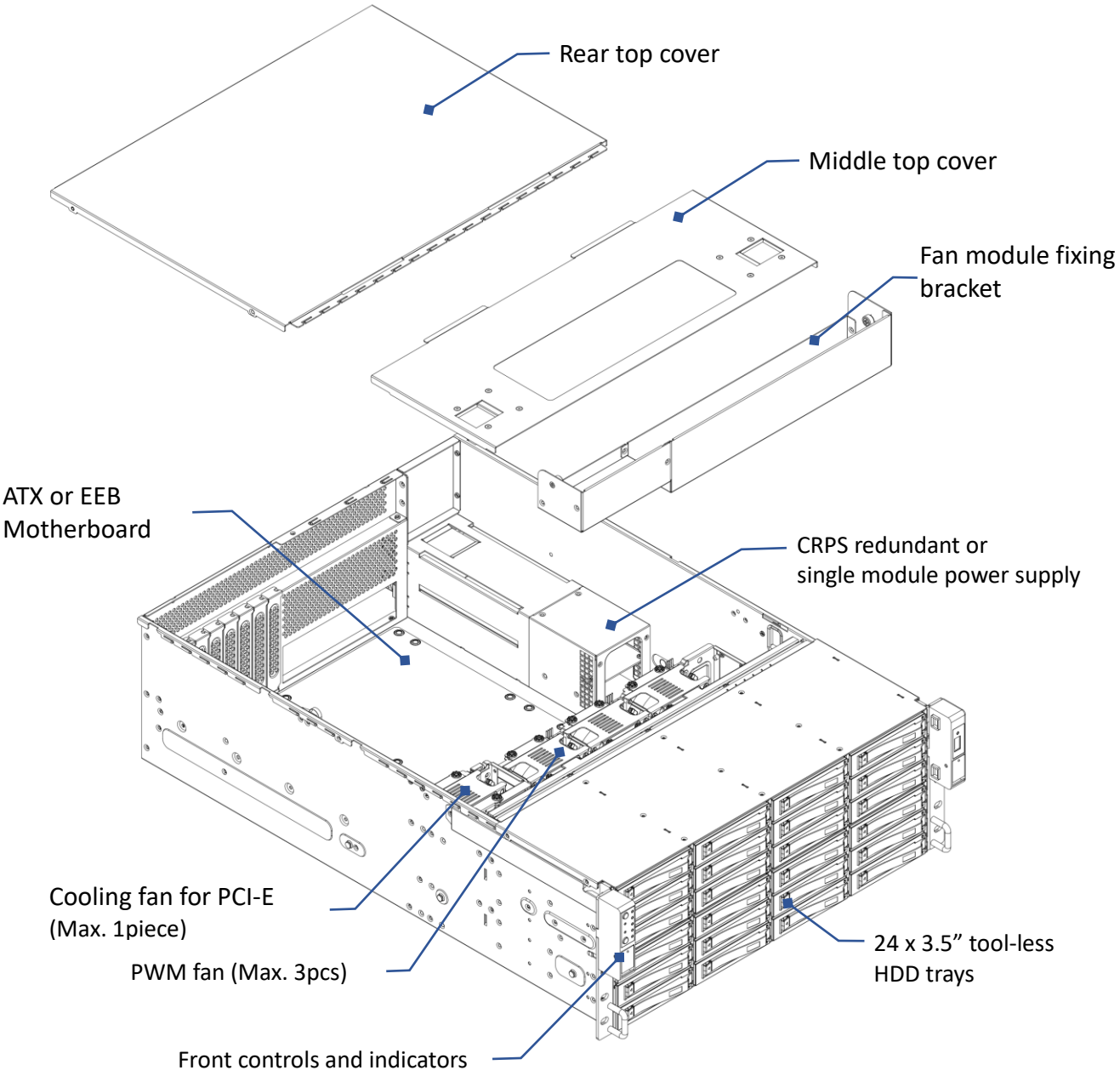

1.2.1 Front Panel Controls and Indicators

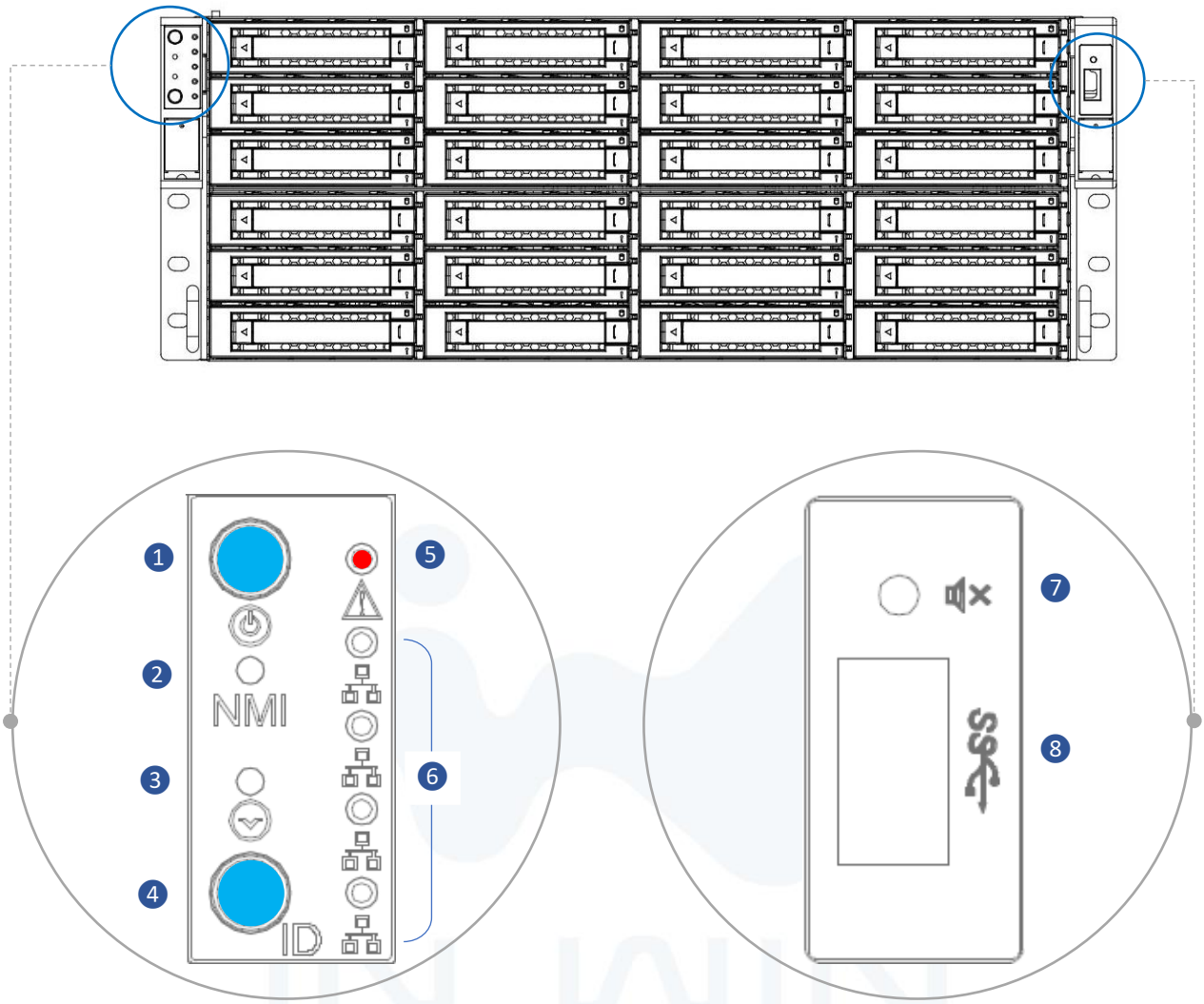

No.	Name	Color	Status	Description
1	Power On/Off Button with LED	Blue	Solid on	System is powered on
		N/A	Off	System is not powered on
2	NMI Button	N/A		Press the button to activate user define
3	System Reset Button	N/A		Press the button to activate system reset
4	Chassis ID Button with LED	Blue	Solid on	Press the button to activate system identification
5	System Fail LED	Red	Solid on	System Fault (Beeper)

6	LAN LED (From top to bottom ranked LAN1 - LAN4)	Amber	Blink	Link between system and network
		N/A	Off	No date transmission or receiving is occurring
7	Mute Button	N/A		Press the button to activate beeper mute
8	USB 3.0 Connector	N/A		USB devices connection

1.2.2 Rear Panel Configuration

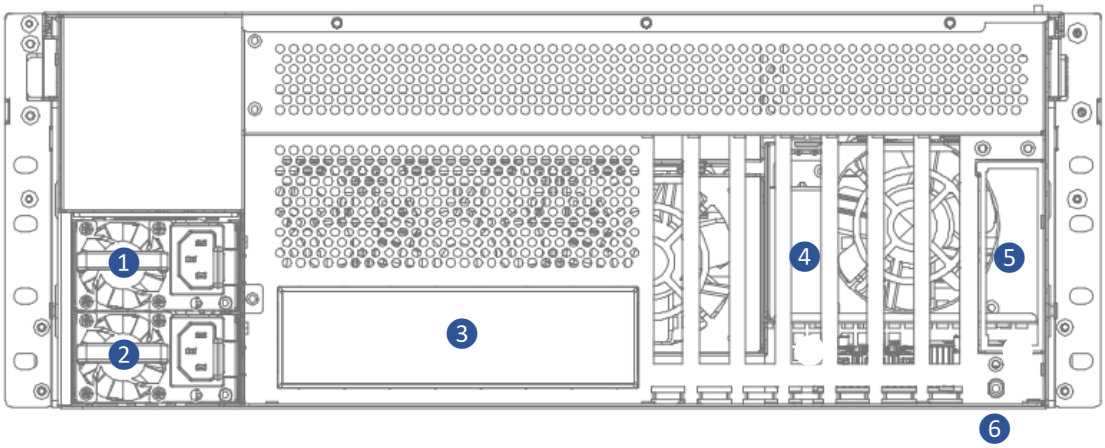

No.	Name	Description
1	Power Module 1	Default primary power supply module
2	Power Module 2	Backup power supply module
3	System I/O (depends on M/B specifications)	The I/O shield should come with the motherboard or provided by motherboard vendors
4	7 Full Height PCI-E Slot	The slot support 120mm high PCI-E cards. The bracket should be removed before using.
5	OS HDD	This slot is for In Win OS disk backup module (option), which supports two 7mm 2.5” SSDs and features hot-swap function.
6	Phone Jack for RS232	It connects to expander via RS232 port, which support monitor expander status.

2 Hardware Installation

2.1 Removing and Installing a Hard Drive

IW-RS424-04 is featured tool-less trays. Users no longer need to use screws to mount disks, and can swap drives faster.

2.1.1 Installing a Hard Drive

Step 1: Press the release button then pull outward on the handle.

Step 2: Place the 3.5" HDD into the tray.

Align the HDD screw with the two pins on the side of the tray.

Press the other side of HDD downward to the tray.

Step 3: Insert the HDD tray to the slot.

Step 4: Push back the lever until it clicks.

Step 1

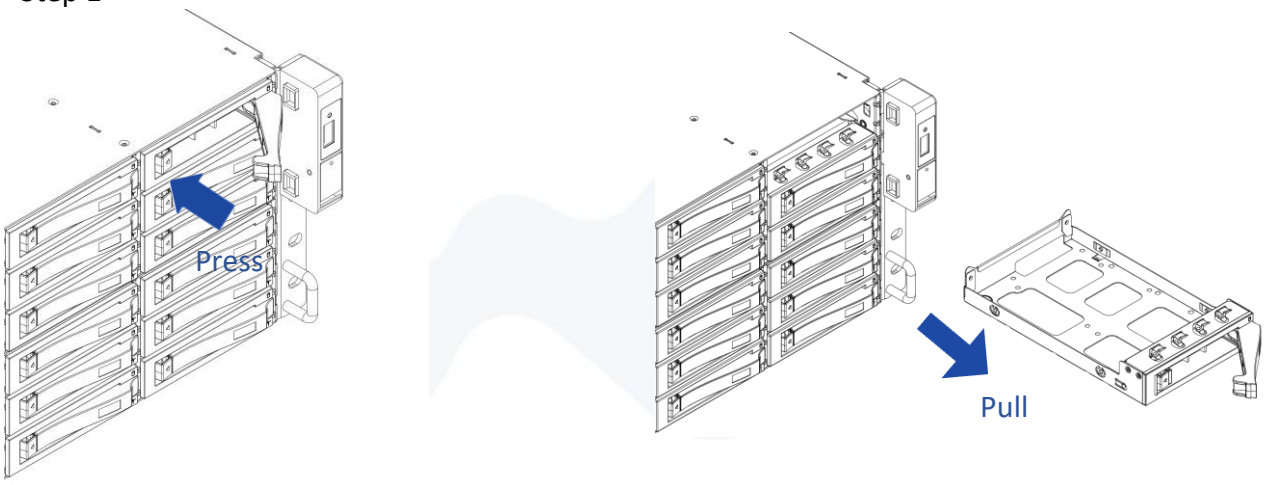

Step 2

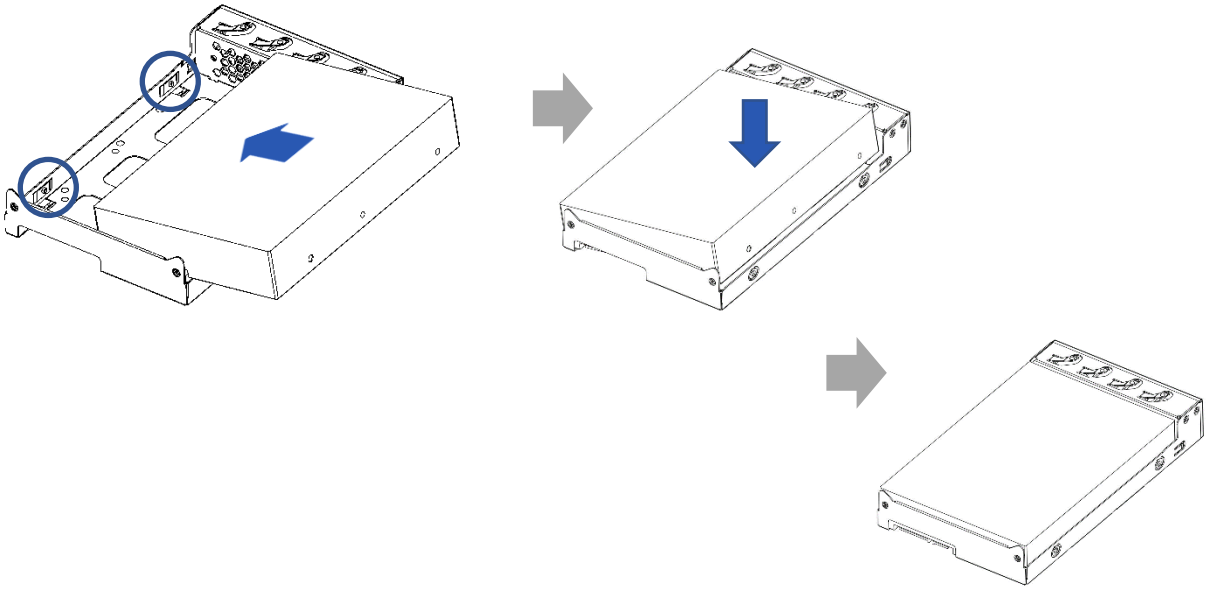

Step 3

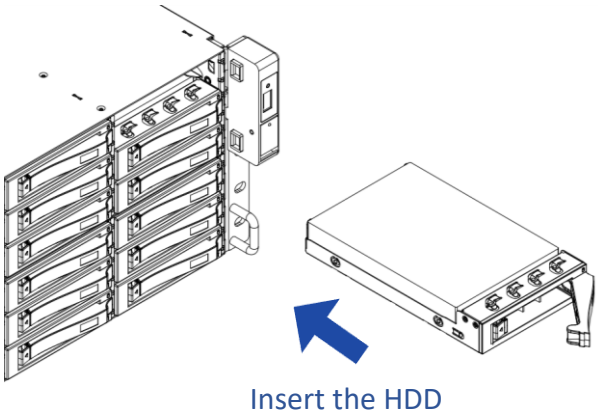

Step 4

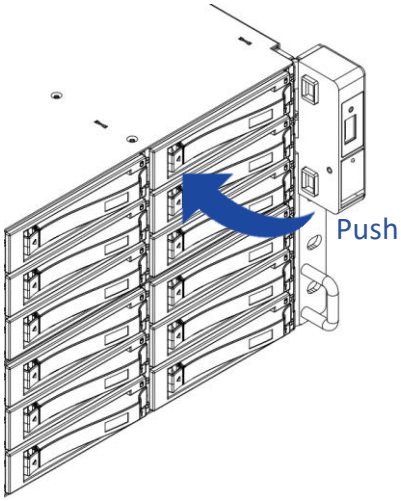

2.1.2 **Removing a Hard Drive**

Step 1: Press the release button then pull outward on the handle.

Step 2: Press the HDD out of the bottom of the tray with your fingers.

Step 3: Pull out the hard drive.

Step 1

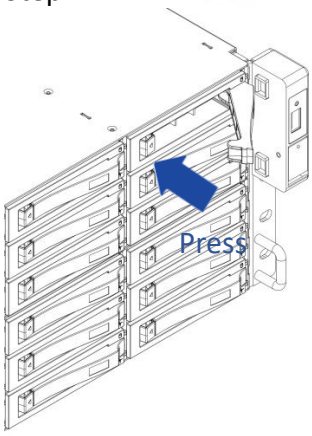

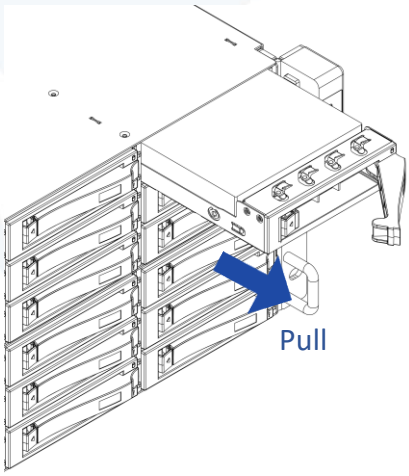

Step 2

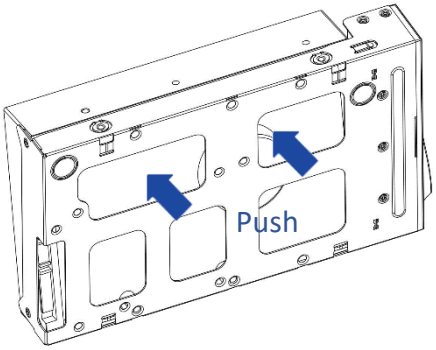

Step 3

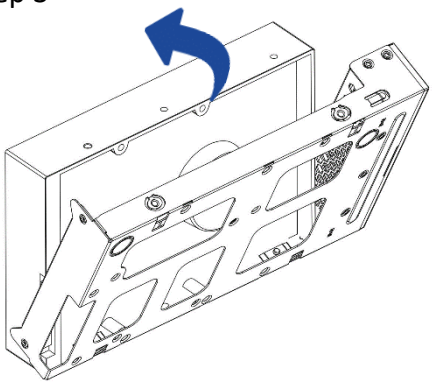

2.2 Removing and Inserting the Top Cover

Step 1: Press inward the button then lift the middle top cover up.

Step 2: Loosen the screws of the rear top cover on the both sides, pull back the cover and lift to remove.

Step 3: To insert the cover, place the cover at the rear and push it to the fitted location. Tighten the screws to secure the rear cover.

Step 4: Place down the middle cover and make sure the clip clicks.

Step 1

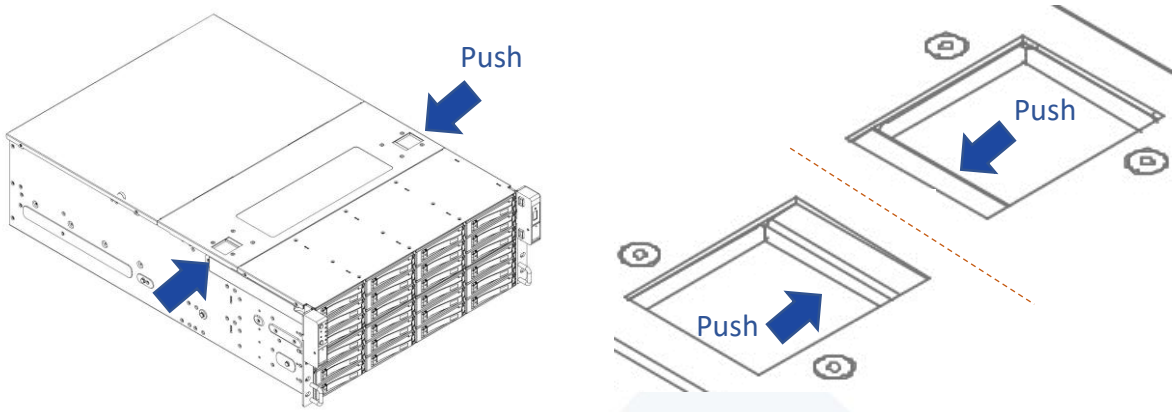

Step 2

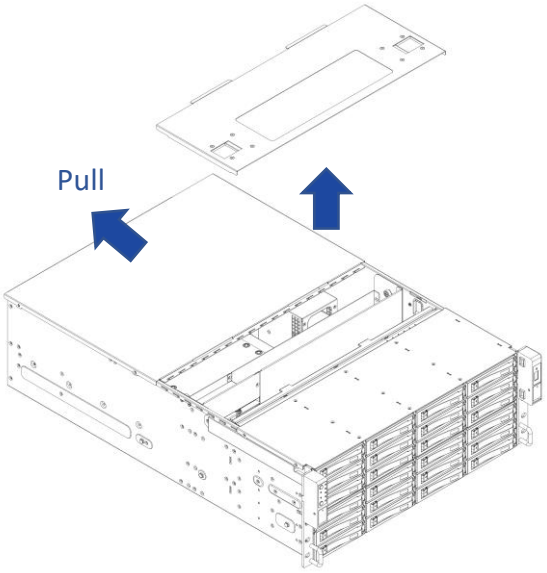

Step 3

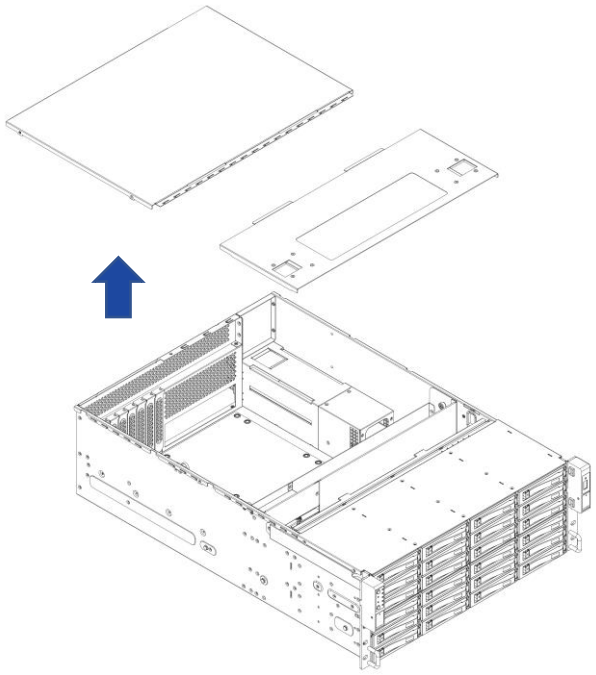

2.3 Removing and Installing the Fan Module

IW-RS424-04's built-in fan modules feature a tool-less design, which makes it easy to maintain.

2.3.1 Removing the Fan Module

Step 1: Loosen the thumb screw on the fan module fixing bracket.
Step 2: Remove the fan module fixing bracket.
Step 2: Pull out the fan module from the fan slot.

Step 1

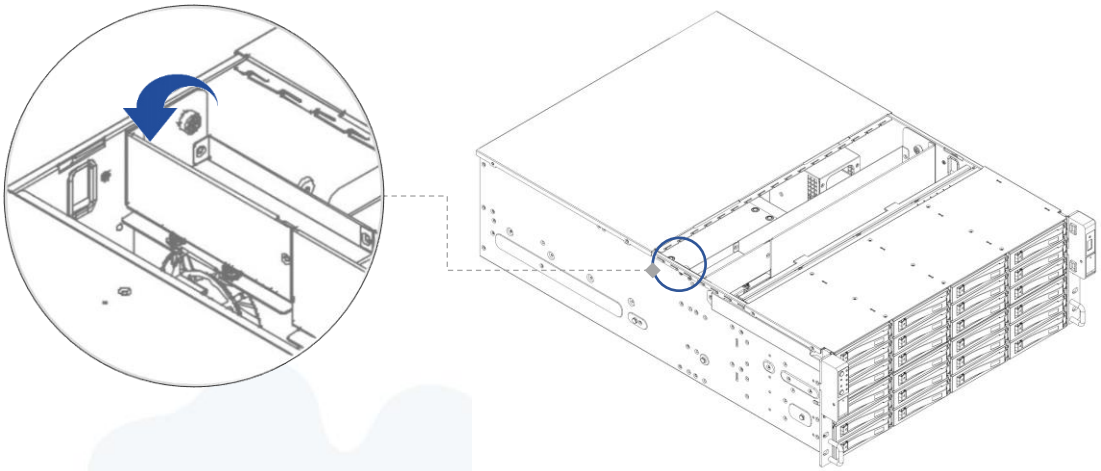

Step 2

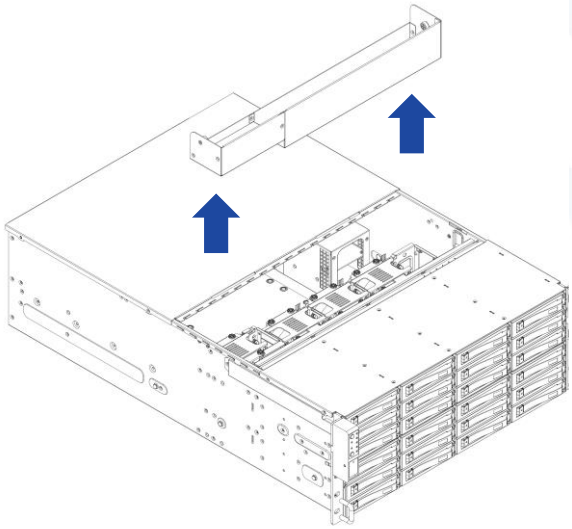

Step 3

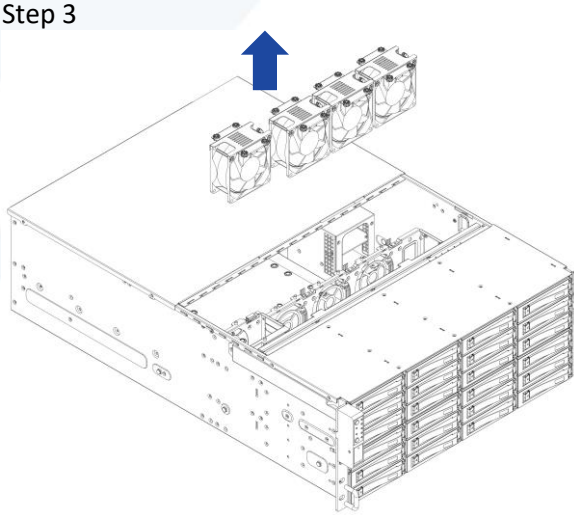

2.3.2 Installing the Fan Module

Step 1: Hold and put the fan module into the fan slot.
Step 2: Stack on the fan bar to fix the fan module.
Step 3: Tighten the thumb screw on the fan module fixing plate.
Step 4: Connect the fan to the motherboard.

Step 1

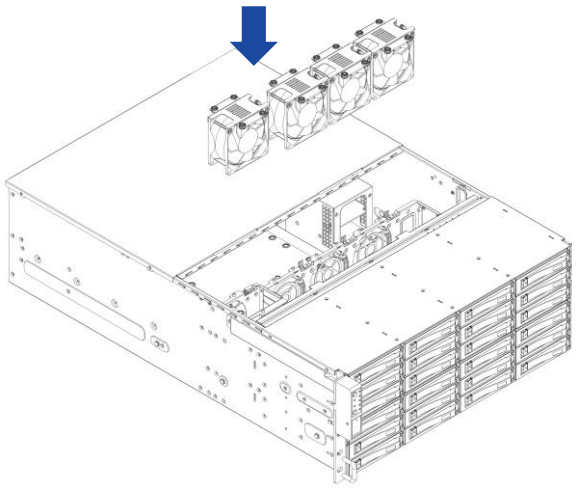

Step 2

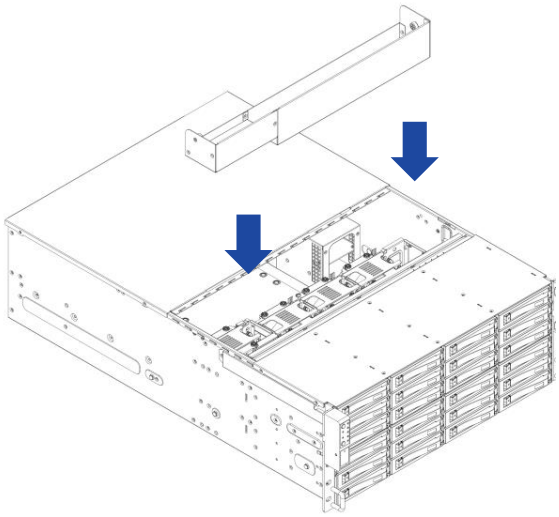

Step 3

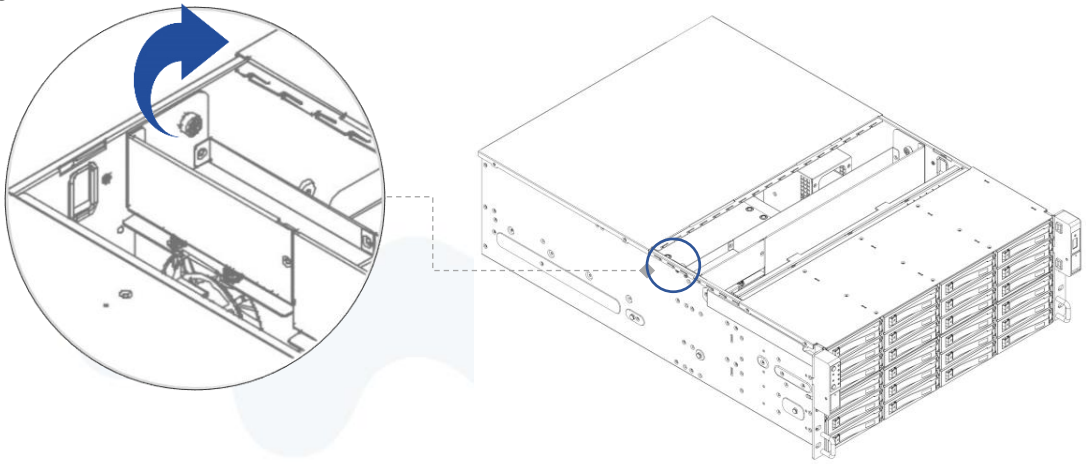

2.4 Removing and Installing the PSU Module

The IW-RS424-04 built-in a redundant power supply unit. With this function, the system is capable of still functioning if one of the modules fail. To replace it, the user only needs to release the failed module, then insert a functional module.

2.4.1 Removing the PSU Module

Step 1: Press the release tab of the power supply unit's module at the back.
Step 2: Pull the module out using the handle.

Step 1

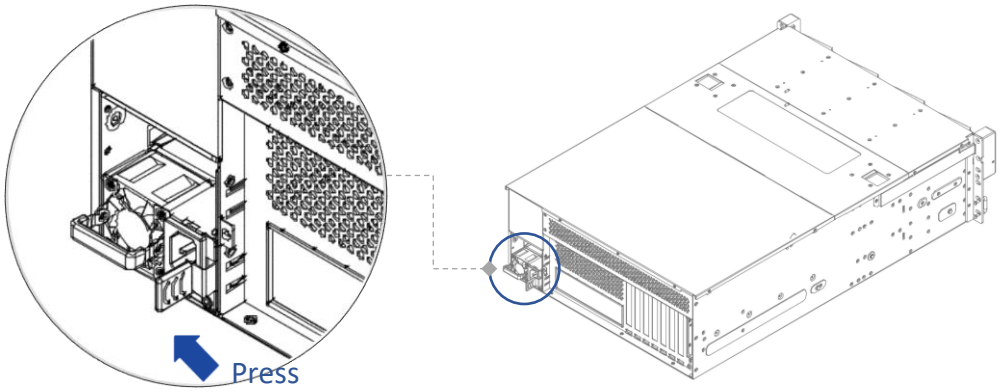

Step 2

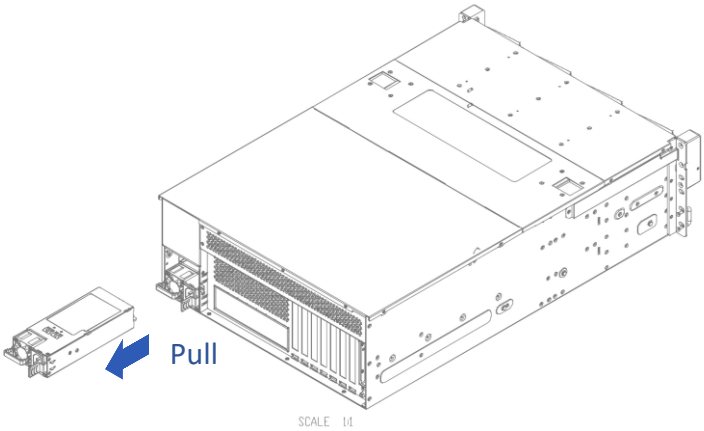

2.4.2 **Installing the PSU Module**

Step 1: Make sure the label is facing upward, and push the power supply module into the cage until you hear a click.

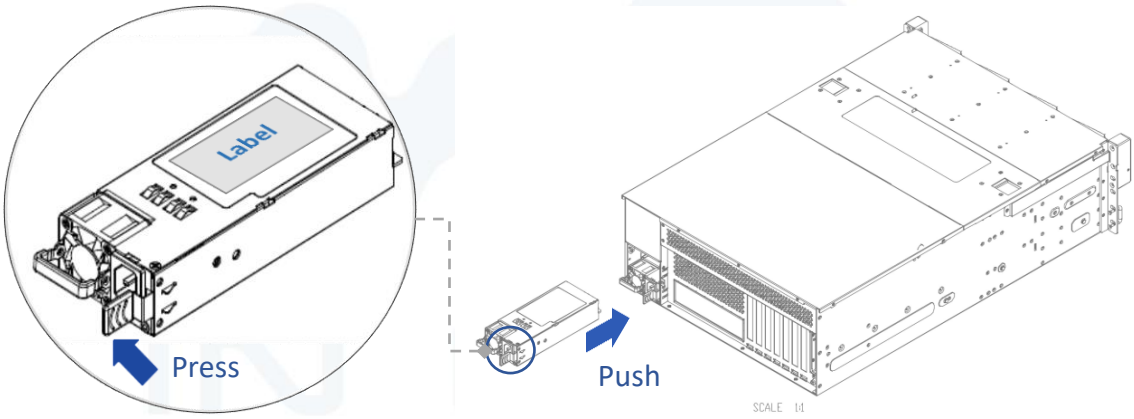

NOTE: ***1. The unit supports In Win PSU modules only, please do not attempt to insert any other brands of modules.***

2. The two PSU modules' output wattage must be the same.

2.5 **Installing Slide Rail**

The IW-RS424-04 is a rackmount model, which support EIA-RS310D standard cabinets and chassis racks. In Win provides standard slide rails to let users mount the chassis on to the cabinets.

2.5.1 **Identifying the Slide Rail**

The slide rail by your order might be different. You can reference the quick installation guide inside the slide rail package, and follow the instructions to mount the rail on to your cabinet or chassis rack.

2.5.2 **Take out the Inner Rail and Slide the Intermediate Rail Back**

Step 1: Pull out the inner rail until it reaches the stop. Release the blue slide tab to unlock.

Step 2: Continue pulling the inner rail until the second stops. Release the white slide tab to remove the inner rail.

Step 3: Pull the latch on the middle rail upward and retract the middle rail back.

Step 1 ~ 2

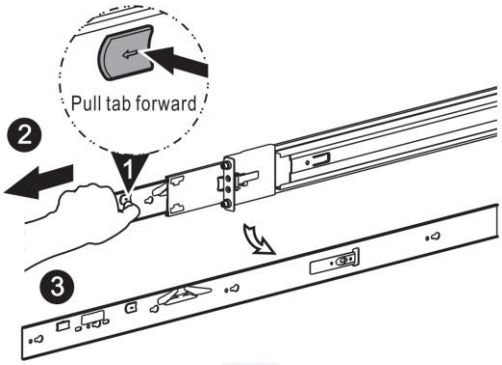

Step 3

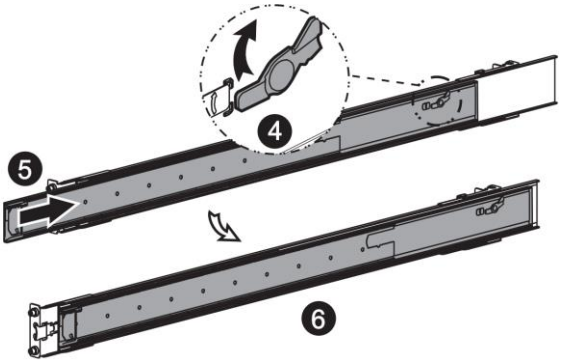

2.5.3 **Attach the Inner Rail to the Chassis**

Step 1: Align the chassis sidewall standoffs to the inner rail keyholes. Slide the inner rail toward the front until the standoff snaps into place, securing the rail to the chassis.

Step 2: Repeat the same action on the other side.

Step 3: When removing the inner rail:

Pull up the latch and slide the inner rail forward. Remove the keyhole from the standoff to detach the inner rail. (Action ❶ and ❷ in the figure)

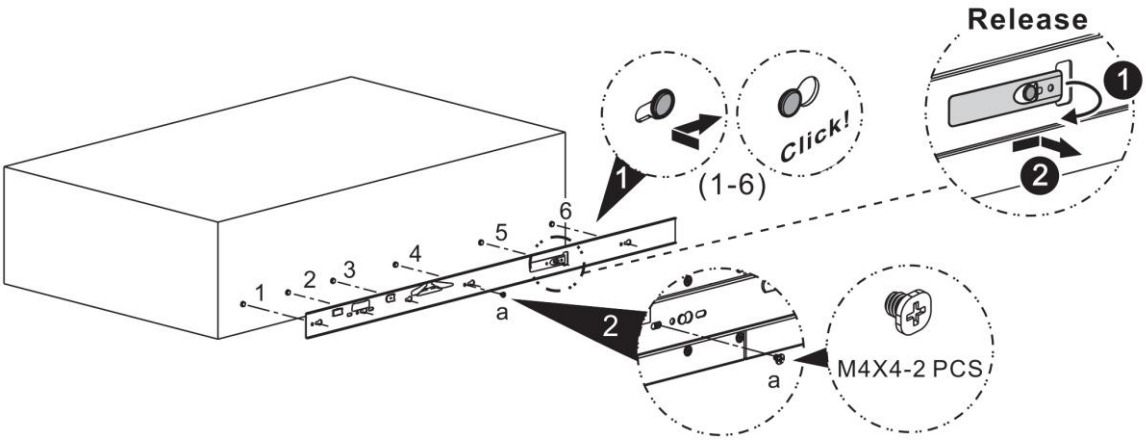

2.5.4 **Mount the Rail Bracket to the Cabinet**

Step 1: Extend the rail bracket over the rear rack of the cabinet.

Step 2: Pull out the rear hook on the end of the outer rail, align and push the rail bracket pins into the post holes on the rack. Then, pull back the hook on the end of the outer rail.

Step 3: Extend the opposite side of the rail bracket to the front rack of the cabinet.

Step 4: Hang the front hooks of the outer rail at the front of the rack post holes. Pull the rail bracket pins that go into the front post holes on the rack until they click.

Step 5: The other side of the rail is symmetrical, repeat the installation steps 1-4.

Step 6: Once you would like to detach the bracket, pull outward on the front and rear hooks of the outer rail to release the bracket. Repeat the same action to the other side.

Step 1 ~ 5

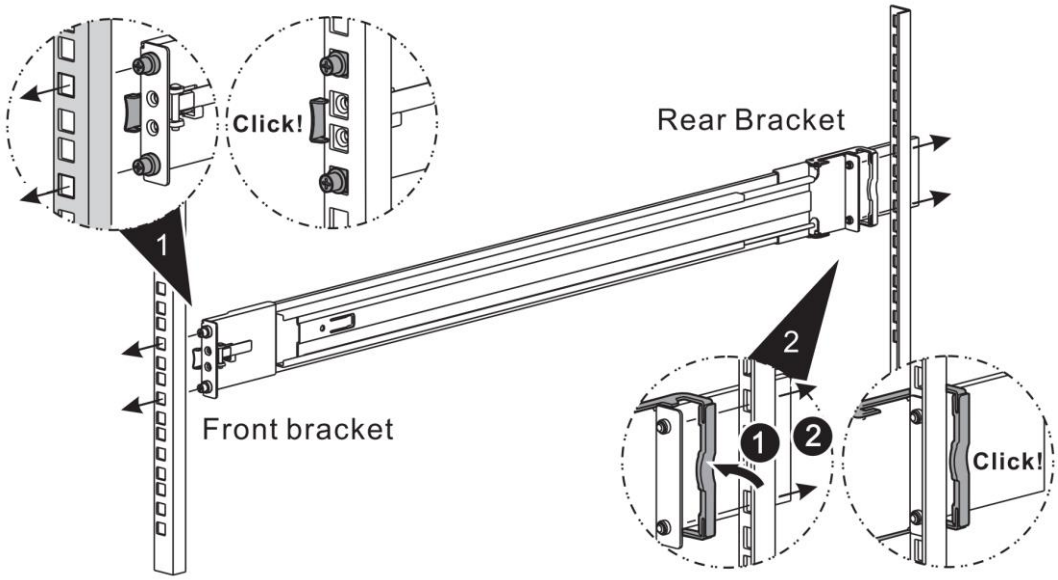

Step 6

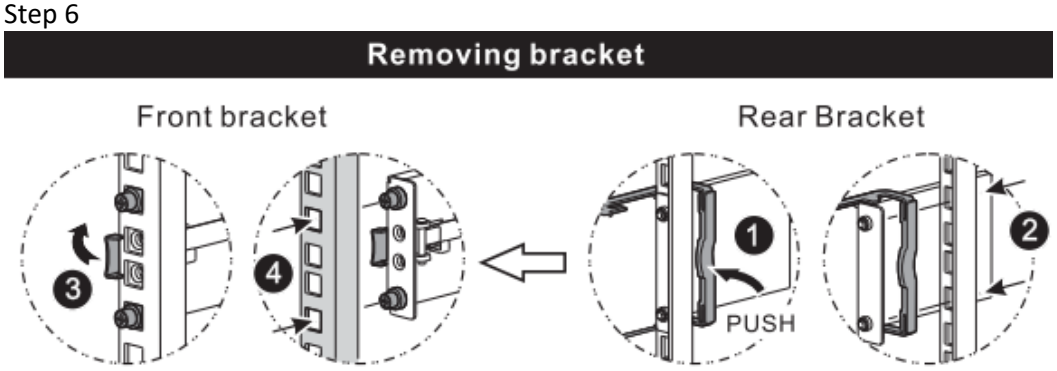

2.5.5 **Insert the Chassis to the Cabinet**

Step 1: Pull out the middle rail to the stop position.

Step 2: Move the ball bearing retainer to the front end of the middle rail, it should click into the locked position.

Step 3: Insert the inner rails of the chassis into the middle rails on the both sides of the rack.

Step 4: Push the chassis to the stop position, then release the blue slide tab (by either pulling the tab forward or pushing the tab back) to continue.

Step 5: Until reaching the second stop position, release the blue slide tab again to continue.

Step 6: Push the chassis into position on the rack completely. Make sure that the front end of the chassis is aligned with the edge of the rack to complete the installation.

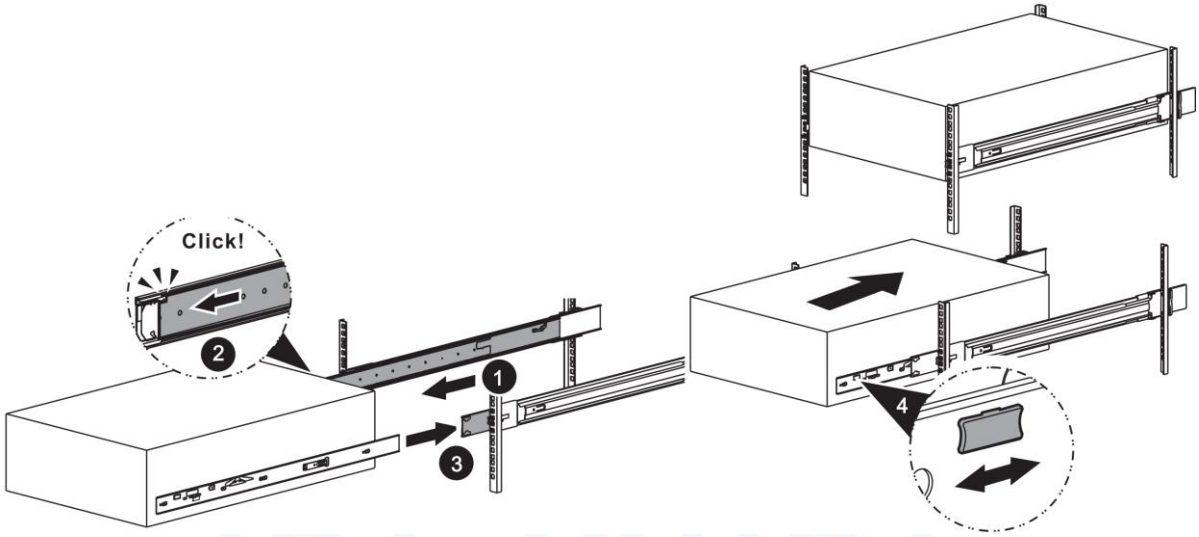

2.6 Installing the Motherboard

Before installing the motherboard, please find the IO shield from your motherboard package, and install it into the system IO window (Refer to 1.2.2). If you cannot find the IO shield, please check with your motherboard vendor, or contact In Win for IO shield OEM service.

Step 1: Remove the plastic dots that are covering the motherboard mounting holes.
Step 2: Secure the pillars on the M/B tray which match with the M/B fixed points.
Step 3: Align the motherboard down to the chassis.
Step 4: Fasten the screws to secure the motherboard in the chassis.

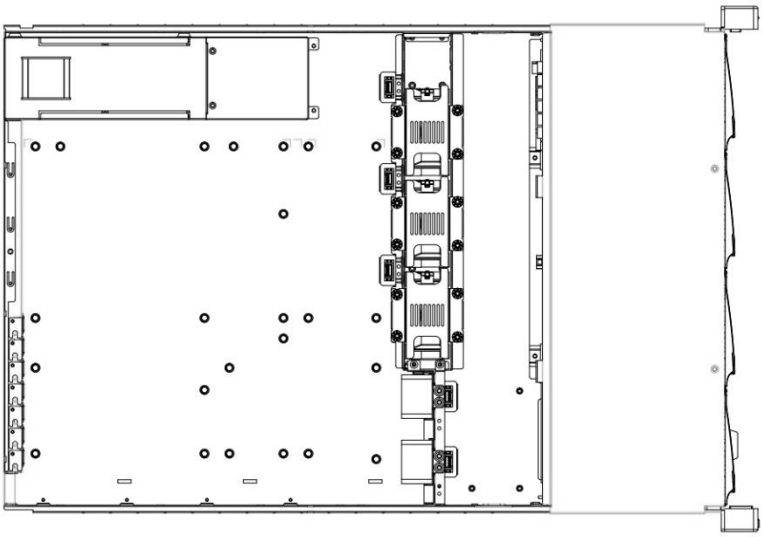

2.7 Connecting Cables

2.7.1 Connecting expander through SAS connectors

Use the SAS 8643 cable to connect the expander to the motherboard.
Use ports 2 and 3 to connect the motherboard or RAID controller, and port 1 for cascading.

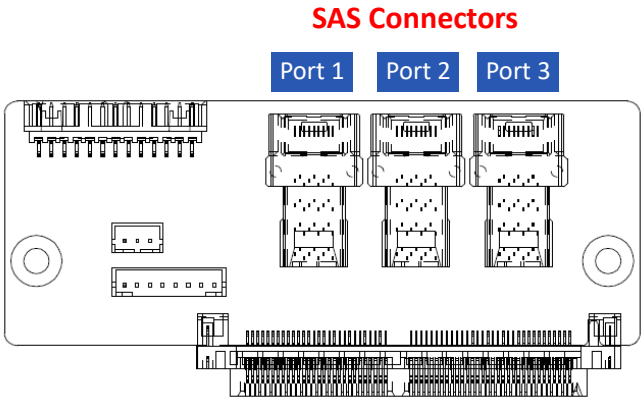

2.7.2 Connecting LED, front control panel and front USB

Refer to your motherboard user guide for pin functions and locations, then plug the connectors to the pins on the motherboard to activate the functions.

USB 3.0

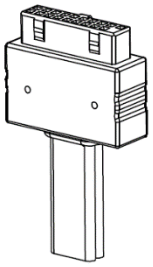

LED Connector

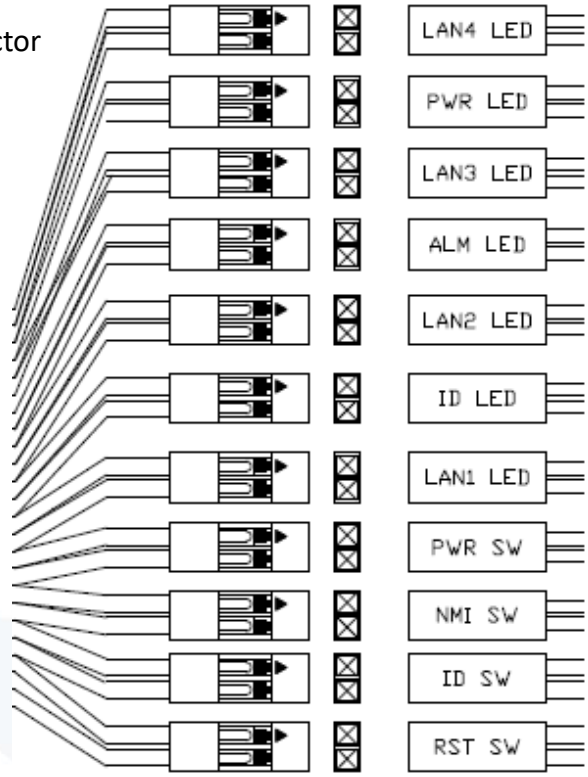

Connector Name	Abbreviation	Color	Front IO Indication
Power Switch	PWR SW	Brown	Power ON/OFF Button with LED
Power LED	PWR LED	Purple	Power ON/OFF Button with LED
NMI Switch	NMI SW	Yellow	NMI Button
Reset Switch	RST SW	Orange	System Reset Button
ID Switch	ID SW	Blue	Chassis ID Button with LED
ID LED	ID LED	Green	Chassis ID Button with LED
Alarm LED	ALM LED	Red	System Fail LED
LAN 1 LED	LAN1 LED	Gray	LAN LED
LAN 2 LED	LAN2 LED	Gray	LAN LED
LAN 3 LED	LAN3 LED	Gray	LAN LED
LAN 4 LED	LAN4 LED	Gray	LAN LED
USB 3.0 Connector	None	Black Flat	USB 3.0
Mute Switch	Mute	White	Mute Switch

3 Backplane Introduction

Top Side

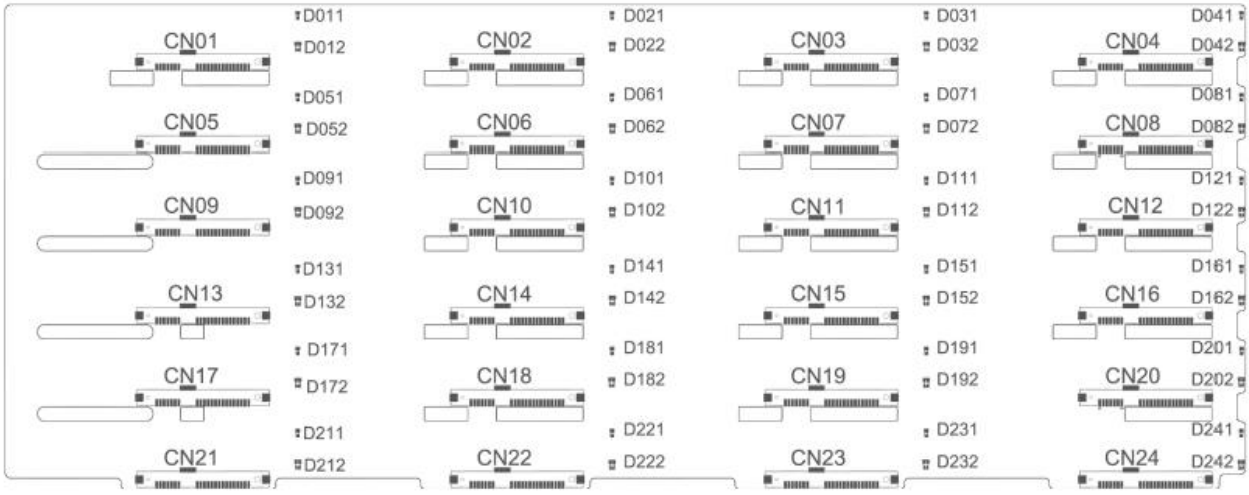

Bottom Side

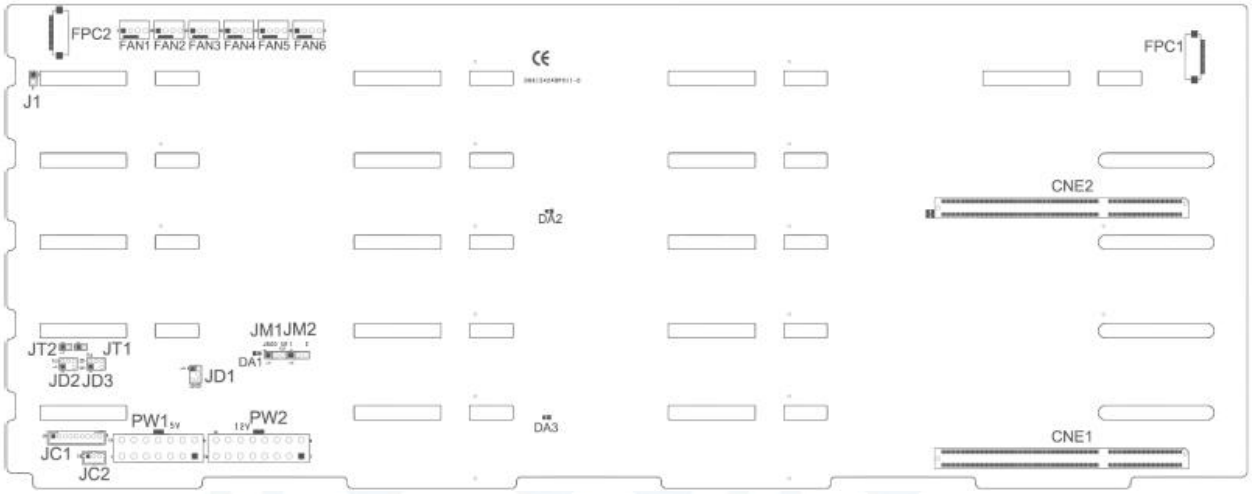

Location	Description
CN01-CN16	SAS Receptacle Connector (SAS 12Gb/s 3.5" HDD Connector)
Dxx1	HDD Power LED
Dxx2	HDD Access/Fault LED
CNE1	Primary SAS Expander Slot
CNE2	Secondary SAS Expander Slot
JD1-JD3	MCU Programming (Factory only)
FPC1	Front Switch FPC/IO Board Connector (Factory only)
PW1	ATX 2x7P 5V Power Connector
PW2	ATX 2x8P 12V Power Connector
JT1	HW LED Test (Factory only)
JT2	HW Test (Factory only)
J1	Server Mute SW Connector

JM1	JM1 Server/JBOD Select (Pin 1-2: JBOD / Pin 2-3: Server)
JM2	JM2 HDD LED Behavior Select (Pin 1-2: Default / Pin 2-3: Proprietary)
JC1	PDB Control Connector
JC2	PMBUS (Factory only)

4 Expander Board Introduction

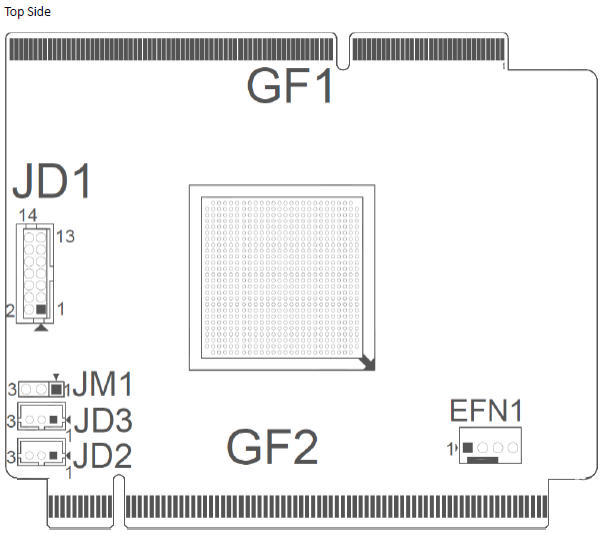

Location	Description
GF1	BP Golden Finger Connector
GF2	IO Board Golden Finger Connector
EFN1	Expander FAN Connector
JM1	Single/Dual Power Module Select: Single: Jumper 1-2; Dual: Jumper 2-3
JD1	ICE Debug Port
JD2	Smart Console
JD3	Debug Port

4.1 Key Features

■ Reliable High Data Rate support (up to 12Gbps)

- SAS 12Gbps support and SATA3 6Gbps support to provide a reliable high-performance data rate.

■ Hot-swappable HDDs

- Hot-swap your HDDs. No need to shut down your system for HDD installation and/or replacement while an HDD failure is present or while adding a new HDD to the system.

■ Cascading

- There is a cascading port on the Expander for cascading to another Expander for expanding disk space.

4.2 UART Usage

4.2.1 UART configuration

RS-232 UART port on the expander module provides a serial connection for users to manage terminal applications such as: Tera Term, Hyper Term…etc.

To manage Expander through the UART port, the settings below must be properly configured to function.

Baud Rate : 115200
Data : 8 bit
Parity : None
Stop Bit : 1 bit
Flow Control : None

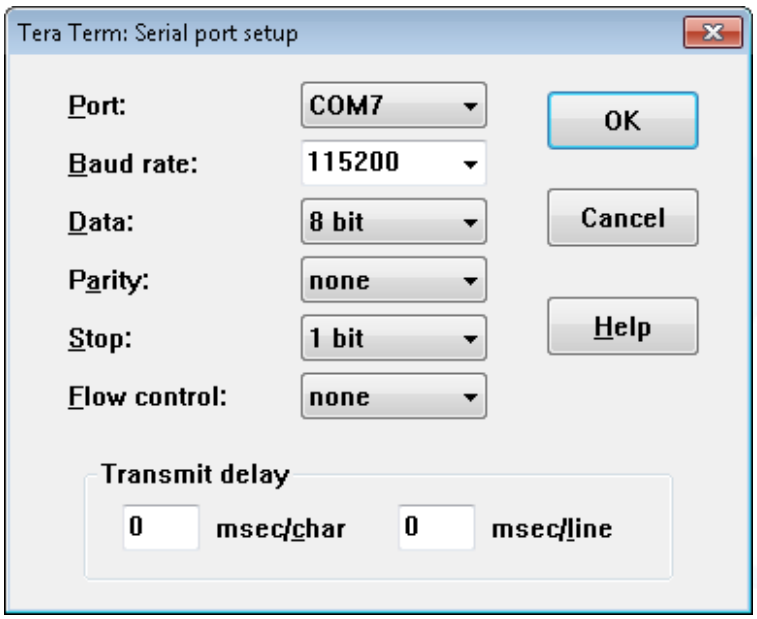

When connected, there is a prompt display on the terminal, then users can start typing CLI commands.

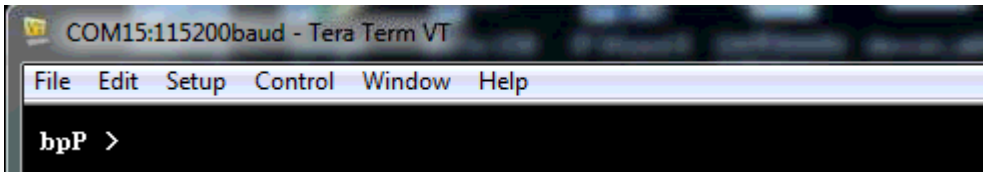

4.2.2 System Revision

To check the Expander revision, type “rev” and “sys rev” to get the expander information such as Vendor ID, Firmware Version, SAS Address, …etc.

```
COM15:115200baud - Tera Term VT
File  Edit  Setup  Control  Window  Help

bpP >rev


==============================================================================
Hardware Revision Information:-
==============================================================================

 Vendor ID                        :IN WIN
 Product ID                       :RS-212-03p
 Product Revision Level           :Minor = 0x10, Unit = 0x00
 Component Type                   :Cobra-R
 Component ID                     :0x0235 (Bond Option :28)
 Component Revision Level         :3      (C1)
 Backplane Type                   :2U12 3.5"
 Expander Type                    :Normal

==============================================================================
Firmware Revision Information:-
==============================================================================

Active Firmware: Firmware Copy 1
  Revision: 00.01.00.00
  Platform Name:   H24R-3X (LSISAS3Exp)
  Version Name:    00.01.00.00. 08/05/2016 12:14

Boot Loader Image:
  Revision: 00.01.00.0F
  Platform Name:   H24R-3X (LSISAS3Exp)
  Version Name:    00.01.00.15. 07/25/2016 16:02
  Firmware Family: 0  OemFamily: 6816
  Fast Boot:  Yes  Image Address: 0x10000000

Firmware Copy 1:
  Revision: 00.01.00.00
  Platform Name:   H24R-3X (LSISAS3Exp)
  Version Name:    00.01.00.00. 08/05/2016 12:14
  Firmware Family: 0  OemFamily: 6816
  Fast Boot:  Yes  Image Address: 0x10180000

Firmware Copy 2:
  Revision: 00.01.00.0F
  Platform Name:   H24R-3X (LSISAS3Exp)
  Version Name:    00.01.00.15. 07/25/2016 16:02
```

```
bpP >sys rev

Vendor ID        : IN WIN
Product ID       : RS-212-03p
Hardware Version: A
Firmware Version: 1.0.0 08/05/2016 12:14
MFG CFG Version : 1.0.0 08/05/2016 12:15
SAS address      : 5B0BD6D1A301113F


bpP >
```

4.2.3 System Monitoring

To monitor the enclosure sensor status, such as temperature and DC power amplitude, type command “sys” in the UART.

```
COM15:115200baud - Tera Term VT
File  Edit  Setup  Control  Window  Help

bpP >sys


Platform    :  H24R-3X
EDFB state  :  enable

<< Manual Configuration >>
System Config      : default
Product Indentity  : default

<< Alarm Status>>
Fan alarm          : 0x0
Temp alarm         : 0x0
Voltage alarm      : 0x0
PSU alarm          : 0x0

<< Thermal Profile Table >>
             Quiet        Regular      Aggressive   Hysterical
Threshold    Trig-Speed   Trig-Speed   Trig-Speed   Trig-Speed
Level        Temp-Level   Temp-Level   Temp-Level   Temp-Level
00           14(C) - 0   *14(C) - 1    14(C) - 3    14(C) - 6
01           18(C) - 1   *18(C) - 1    18(C) - 4    18(C) - 6
02           24(C) - 1   *24(C) - 2    24(C) - 5    24(C) - 6
03           32(C) - 2   *32(C) - 3    32(C) - 6    32(C) - 7
04           36(C) - 4   *36(C) - 4    36(C) - 7    36(C) - 7
05           42(C) - 5   *42(C) - 5    42(C) - 7    42(C) - 7
06           52(C) - 6   *52(C) - 6    52(C) - 7    52(C) - 7
07           60(C) - 7   *60(C) - 7    60(C) - 7    60(C) - 7
PWM Ctrl : disable

<< Enclosure Monitor >>
Temperature
 ( 1) Exp Die       :    47 dC       status : OK
 ( 2) Sense BP1     :    24 dC       status : OK
 ( 3) Sense BP2     :    24 dC       status : OK
Voltage
 ( 1) 5V Sensor     :  5.06 V        status : OK
 ( 2) 12V Sensor    : 12.12 V        status : OK


bpP >
```

```
bpP >sys alarm

Temperature      3 0x0
 ( 1) Exp Die       :    47 dC    status : OK
 ( 2) Sense BP1     :    25 dC    status : OK
 ( 3) Sense BP2     :    24 dC    status : OK
Voltage          2 0x0
 ( 1) 5V Sensor     :  5.05 V     status : OK
 ( 2) 12V Sensor    : 12.12 V     status : OK
```

4.2.4 Disk PHY Status

To monitor the SAS PHY status, type “Phyinfo” or “sys hdd” to check. Users can check the disk link status by using these commands.

```
COM15:115200baud - Tera Term VT
File  Edit  Setup  Control  Window  Help

bpP >phyinfo

                    SSSSSSS                                                                  EE
                PHY STMSTMA                          ZONE            CONN CONN MAP DR
PHY  DEV        CNG PPPPPPT                   ROUTE ZONE CTRL Bay  CONN ELEM PHY  PHY FR
ID   TYPE  NLR  CNT IIITTTA ATTACHED SAS ADDR TYPE  GRP  BUS  No.  TYPE INDX LINK ID  BL

00         0x0  0x01 -------                    T    0x01 0x04 ---- 0x00 ---- 0x00 016 --
01         0x0  0x01 -------                    T    0x01 0x04 ---- 0x00 ---- 0x00 017 --
02         0x0  0x01 -------                    T    0x01 0x04 ---- 0x00 ---- 0x00 018 --
03         0x0  0x01 -------                    T    0x01 0x04 ---- 0x00 ---- 0x00 019 --
04         0x0  0x01 -------                    T    0x01 0x04 ---- 0x00 ---- 0x00 020 --
05         0x0  0x01 -------                    T    0x01 0x04 ---- 0x00 ---- 0x00 021 --
06         0x0  0x01 -------                    T    0x01 0x04 ---- 0x00 ---- 0x00 022 --
07         0x0  0x01 -------                    T    0x01 0x04 ---- 0x00 ---- 0x00 023 --
08         0x0  0x01 -------                    T    0x01 0x04 ---- 0x00 ---- 0x00 024 --
09         0x0  0x01 -------                    T    0x01 0x04 ---- 0x00 ---- 0x00 025 --
10         0x0  0x01 -------                    T    0x01 0x04 ---- 0x00 ---- 0x00 026 --
11         0x0  0x01 -------                    T    0x01 0x04 ---- 0x00 ---- 0x00 027 --
12   END   12G  0x03 ------1 5B0BD6D1_A3011100  D    0x01 0x04   00 0x20   00 0x00 000 11
13   END   12G  0x03 ------1 5B0BD6D1_A3011101  D    0x01 0x04   01 0x20   01 0x00 001 11
14   END   12G  0x03 ------1 5B0BD6D1_A3011102  D    0x01 0x04   02 0x20   02 0x00 002 11
15   END   12G  0x03 ------1 5B0BD6D1_A3011103  D    0x01 0x04   03 0x20   03 0x00 003 11
16         0x0  0x01 -------                    D    0x01 0x04   04 0x20   04 0x00 004 11
17         0x0  0x01 -------                    D    0x01 0x04   05 0x20   05 0x00 005 11
18         0x0  0x01 -------                    D    0x01 0x04   06 0x20   06 0x00 006 11
19         0x0  0x01 -------                    D    0x01 0x04   07 0x20   07 0x00 007 11
20         0x0  0x01 -------                    D    0x01 0x04   08 0x20   08 0x00 008 11
21         0x0  0x01 -------                    D    0x01 0x04   09 0x20   09 0x00 009 11
22         0x0  0x01 -------                    D    0x01 0x04   10 0x20   10 0x00 010 11
23         0x0  0x01 -------                    D    0x01 0x04   11 0x20   11 0x00 011 11
24         0x1  0x01 -------                    D    0x01 0x04 ---- 0x00 ---- 0x00 012 --
25         0x1  0x01 -------                    D    0x01 0x04 ---- 0x00 ---- 0x00 013 --
26         0x1  0x01 -------                    D    0x01 0x04 ---- 0x00 ---- 0x00 014 --
27         0x1  0x01 -------                    D    0x01 0x04 ---- 0x00 ---- 0x00 015 --
SXP0 END   12G  0x01 --11--- 5B0BD6D1_A301113D  D    0x01 0x04 ---- 0x2F   12 0x00 028
SXP1 END   12G  0x01 1----1- 5B0BD6D1_A301113F  D    0x01 0x04 ---- 0x2F   13 0x00 029
SXP2       0x0  0x00 -------                    D    0x01 0x04 ---- 0x00 ---- 0x00 030

Expander Change Count:  0027
Zone Configuring:  0
Self Configuring:  0
Configuring:  0
```

```
bpP >sys hdd

    Phy   SAS Address        Link Speed   Device Type   Status
 1  12    5B0BD6D1_A3011100      6G          END        OK
 2  13    5B0BD6D1_A3011101      6G          END        OK
 3  14    5B0BD6D1_A3011102      6G          END        OK
 4  15    5B0BD6D1_A3011103      6G          END        OK
 5  16                          0x0                    Not Installed
 6  17                          0x0                    Not Installed
 7  18                          0x0                    Not Installed
 8  19                          0x0                    Not Installed
 9  20                          0x0                    Not Installed
10  21                          0x0                    Not Installed
11  22                          0x0                    Not Installed
12  23                          0x0                    Not Installed


bpP >
```

4.2.5 Firmware Update

In some occasions, when required, users can update expander firmware through UART port via Xmodem protocol.

* A power interruption or failure during firmware upgrade will cause damage to the device or unrecoverable data errors.

There are 2 firmwares for expander. Be sure these binary files are available in the host before conducting firmware updates.

1. SAS Expander Operation Firmware
2. SAS Expander MFG CFG binary

The updated firmware does not take effect until a reset (either system reboot or reset expander via CLI command – “reset”).

3.2.5.1 SAS Expander Operation Firmware Update

A. “fwdl” command on terminal

B. Type “y” to commit firmware upgrade.

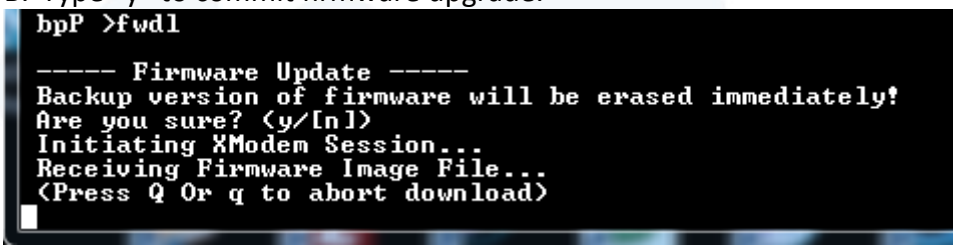

C. Select Xmodem as the protocol to transfer file.

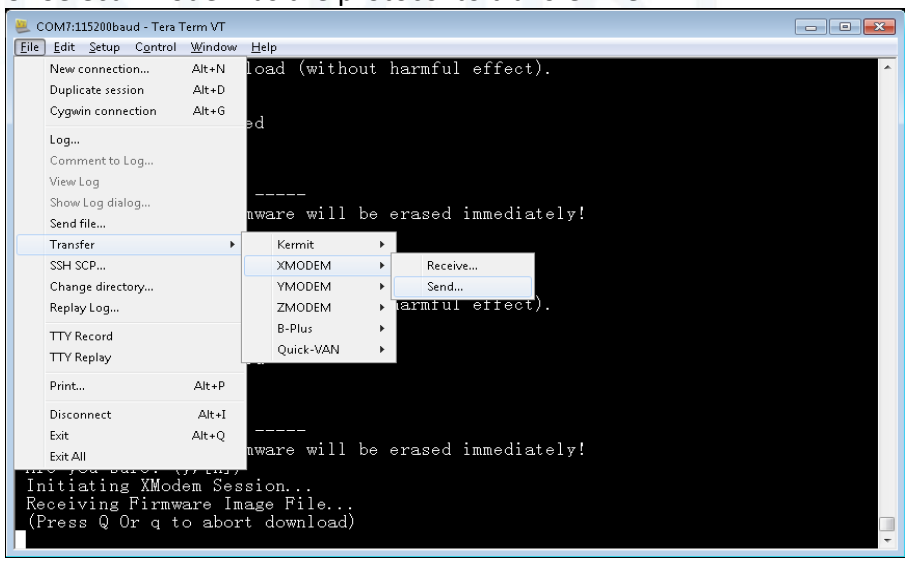

D. Select the correct SAS Expander firmware file.

E. Click on “Open” to start the selected firmware transferring to SAS Expander.

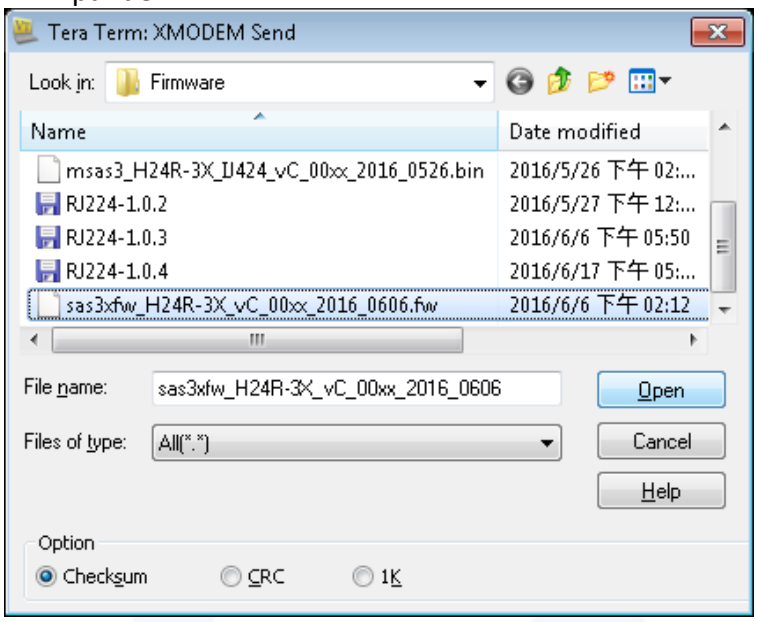

F. Terminal would then start firmware transfer.

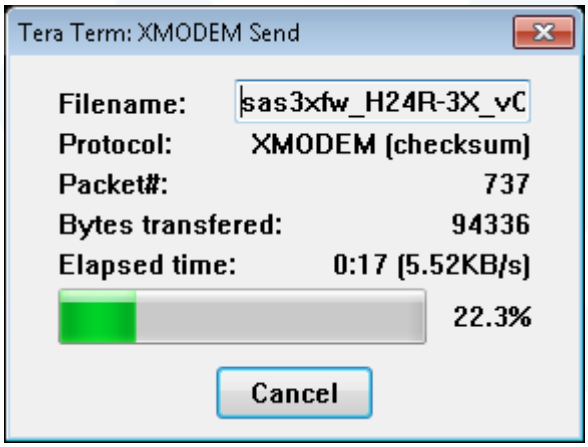

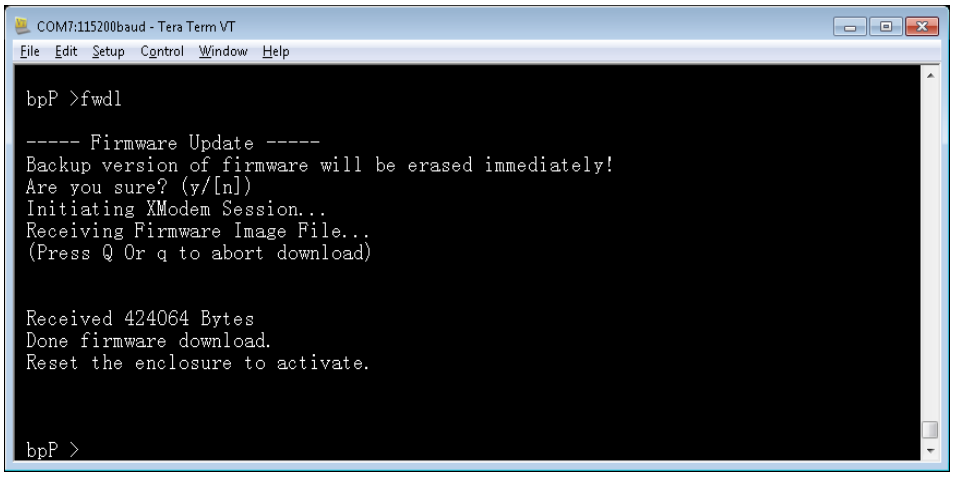

G. After firmware transfer is completed, type ‘reset’ command in terminal or power cycling system to activate the new firmware.

3.2.5.2 SAS Expander MFG CFG Binary Update

A. Similar to operation firmware upgrade, type “mfgdl” on console.

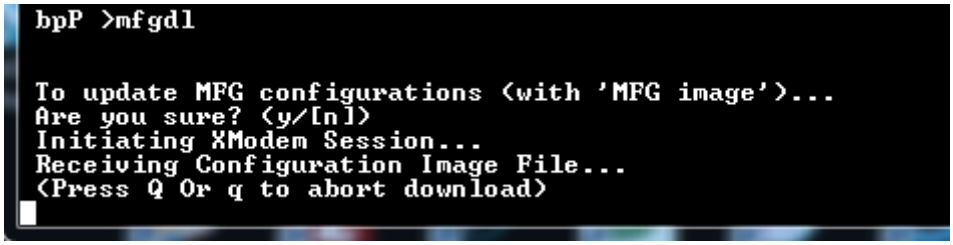

B. Type “y” to commit MFG file upgrade.
C. Select Xmodem as the file transfer protocol.
D. Select the correct MFG, CFG file from the file browser.
E. Click “Open” to start file transfer.

F. Terminal should then start file transfer.

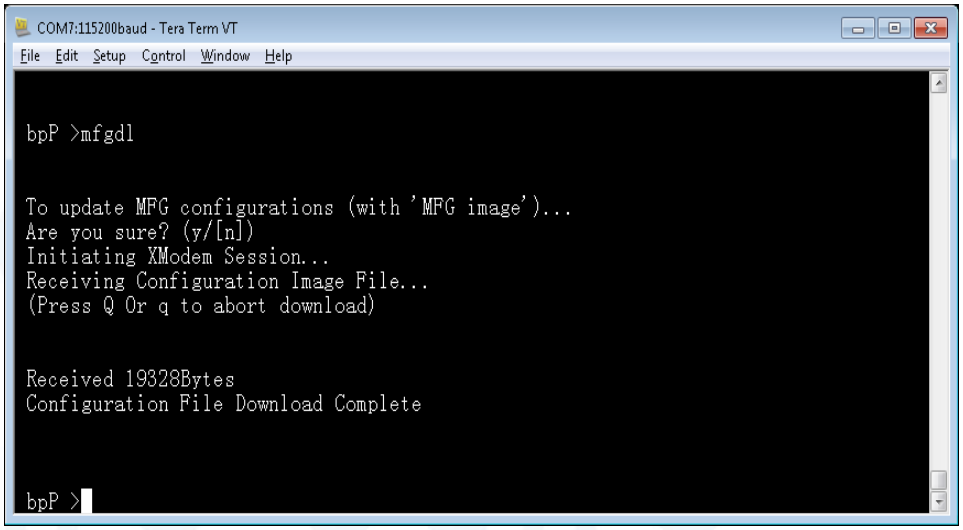

G. After the firmware transfer is completed, type ‘reset’ command in terminal or power cycling system to activate the new firmware.

5 Compatibility Lists

To reach the best performance and avoid system failure, In Win strongly recommends users to choose the components from In Win's compatibility list. All the components are tested in In Win's lab, and assured the components are complementary with In Win's chassis.
You can download the latest updated device compatibility list from In Win's website:
https://www.in-win.com/en/ipc-server

6 Q&A

Section 1: Expander

1. **What is the In Win expander's function?**
   A: Expanded capacity, the expander can manage more SAS drives through a SAS cable in JBOD.

2. **Why is the IW-RS series storage server chassis built-in expander boards, and the IW-RJ series JBOD enclosures using expander modules?**
   A: IW-RS chassis needs a motherboard to compose a system, the expander board can work seamlessly with the motherboard to manage the drives. Different from the chassis, the IW-RJ JBOD enclosure uses hot-swappable expander modules to satisfy the requirements of both capacity expansion and JBOD redundancy.

3. **Why does the IW-RJ JBOD enclosure need 2 expander modules?**
   A: It is for redundancy. If the user does not need this function, a single expander module also works.

4. **What are the functions of the three connector ports on the expander module?**
   A: SAS 0 is the connecting port to Server 0/RAID or HBA 0, SAS 1/RAID or HBA 1 is to Server 1, and EXP port is cascaded with another JBOD to expand the capacity.

5. **Can I add more ports to the expander module?**
   A: First, please understand that these ports are used for cable connections. Second, only the Phy quantity of the expander chipset is allowed. Technically, this configuration can be worked out, yet technical alignment must be considered.

   For example, an expander with a 3x36R chipset has totally 36 Phys, and each port consumes 4 Phys; thus, we can design a 9-port expander (36/4 = 9) to connect 9 cables. However, once we have used all the Phys for connecting, resulting in no remaining Phys to connect HDDs, and this design cannot achieve the original function.

6. **Once I find that the expander is failing, what can I do?**
   A: IW-RS series: Power off the system, and make sure the system is completely shut down. Unplug the SAS cable to replace the expander board.
   IW-RJ series: Remove the faulty expander module, and replace a new expander module.

Section 2: Hard Disk

7. **What is the difference between SAS and SATA disk, and how to choose?**
   A: SATA has only one throughput channel for data transmission, SAS has two. Once the system is designed with redundant functionality, SAS disk provides performance and reliability. SATA provides a cost selective option.

8. **Are SAS and SATA disks compatible with both In Win IW-RS and IW-RJ series?**
   A: Yes, In Win IW-RS and IW-RJ series support both SAS and SATA disks.

9. **Can I mount 2.5" disks to 3.5" tool-less slots?**
   A: 3.5" tool-less slot does not support 2.5" disks at this moment. If this requirement is mandatory, please contact In Win sales for OEM service.

10. **Does the storage server or JBOD have to be fully populated to work?**
    A: No, you can mount partial bays and start the system. Once you need more storage space in the future, then add more disks.

11. **Can I mount both SAS and SATA disks in an enclosure?**
    A: Yes, it works. However, you may need to consider about potential alignment issues.

12. **If my system drive fails, can I replace the drive without shutting down the system?**
    A: By default, IW-RS series' two internal disks don't support hot-swap feature. You can order an optional 2-bay hot-swap system disk module to reach your purpose.

Section 3: RAID/ Cascade

13. **Is RAID card a required component for running a RAID system?**
    A: If your motherboard featured an onboard RAID function, or your OS supports software RAID, you do not need a RAID card. For technical details, please contact your motherboard or software vendor.

14. **How many units can be cascaded to the IW-RJ series JBOD?**
    A: In maximum, a daisy chain can stripe 48 disks. (RJ212 max. 24 disks, RJ316 max. 32 disks, RJ424 max. 48 disks)

15. **If I would like to cascade the JBOD, what components do I need?**
    A: You will need an SFF-8644 to SFF-8644 SAS cable, which meets the T10 standard. And the length we suggest is less than 3M to reach the best performance.

16. **If I only have an internal RAID controller card, and I would like to expand the capacity, how to add more disks?**
    A: IW-RJ series JBOD is designed for this purpose. If your RAID controller card does not have the external connecting port, you can use an SFF-8643 to SFF-8644 adaptor cable to connect the JBOD enclosure.

Section 4: Others

17. Why does the PSU have two modules? What are these two modules for?
A: Two PSU modules are used for redundancy. If you need this function, a PSU with two modules are required.

18. Can I add or reduce the quantity of fans?
A: The quantity of fans are related to the radiating efficiency. Usually, the quantity of fans depends on the system loading and the heat generation. Unless you have already tested, we strongly recommend not to change the default fans quantity.

19. Which parts support the hot-swap feature?
A: IW-RS storage server: Fan~~s~~, PSU and HDD.
IW-RJ JBOD enclosure: Fan~~s~~, PSU, expander module and HDD.

20. Are 12Gb SAS ports compatible with 6Gb SAS or 6Gb SATA ports? What adapter can be converted?
A: 12Gb SAS does not align with 6Gb SAS, In Win does not have an adapter to convert.

21. If the arm or handle is broken, how can I repair or replace it?
A: Please contact your local In Win partner, or contact support for replacement and repair services.

22. If I would like to modify the GUI, how can I access it?
A: The copyright of the GUI is owned by In Win. If you want to amend anything of the GUI, please contact In Win sales for ODM services.

7 Technical Support

If you need help with installation or troubleshooting, you can contact your local In Win partner, or send an e-mail to In Win's local contacts for technical assistance.