IW-RJ316-04

User Manual

Table of Contents

PREFACE *3*

SAFETY INFORMATION *3*

CAUTION *4*

SPECIFICATIONS *5*

1 Product Introduction *6*

1.1 Box Contents **6**

1.2 General Information **7**

1.2.1 Front Panel Controls and Indicators 8

1.2.2 Rear Panel Configuration 9

1.2.2.1 Expander Configuration 9

2 Hardware Installation *10*

2.1 Removing and Installing a Hard Drive **10**

2.1.1 **Installing a Hard Drive** 10

2.1.2 **Removing a Hard Drive** 11

2.2 Removing and Installing the Fan Module **11**

2.2.1 **Removing the Fan Module** 11

2.2.2 **Installing the Fan Module** 12

2.3 Removing and Installing the PSU Module **12**

2.3.1 **Removing the PSU Module** 12

2.3.2 **Installing the PSU Module** 13

2.4 Removing and Installing the Expander Module **14**

2.4.1 **Removing the Expander Module** 14

2.4.2 **Installing the Expander Module** 15

2.5 Rail Installation **15**

2.5.1 **The Type of Rail Kit** 15

2.5.2 **Fixed Rails** 15

2.5.3 **Slide Rail** 16

2.5.3.1 Take out the Inner Rail and Slide the Intermediate Rail Back 16

2.5.3.2 Attach the Inner Rail to the Chassis 16

2.5.3.3 Mount the Rail Bracket to the Cabinet 17

2.5.4 **Insert the Chassis to the Cabinet** 18

3 Expander Board Introduction 19

4 Ethernet Management Card Introduction 20

5 User Interface Introduction 21

5.1 Overview 21

5.2 Key Features 21

5.3 Software Management 22

5.3.1 **System Management Structure** 22

5.3.2 **Serial Port Management** 27

5.3.3 **Network Management** 31

5.3.4 **Version Information** 37

5.3.5 **System Status** 40

5.3.6 **Network Settings** 42

5.3.7 **Disk Information** 43

5.3.8 **Zone Setting** 45

5.3.9 **Firmware Upgrade** 48

5.3.10 **System Logs** 56

6 Compatibility Lists 60

7 Q&A 60

8 Technical Support 62

PREFACE

Thank you for choosing In Win IW-RJ316-04. This manual is written for system technicians who are responsible for installation, troubleshooting, managing and repairing this server chassis. This document provides the overview of all the features of the chassis, a list of accessories or other components you may need to finish the installation, troubleshooting methods and instructions on adding and removing components on the In Win IW- RJ316-04. For the latest version of this manual, you may visit In Win's server website to download the latest updated version.

SAFETY INFORMATION

To ensure a safe and smooth operation of your In Win IW-RJ316-04, it is essential that you choose an appropriate location for the system, provide an appropriate operating environment and supply an adequate amount power for all components of the system. As you plan for installation, follow the guidelines below to ensure that the system and its environment are safely and appropriately positioned for efficient operation and service. Your system should be installed and serviced only by a qualified technician.

Environment selection: The system is designed to operate in a typical office environment:

- The location should be clean, dry and free of airborne particles.
- It should be a well-ventilated room, and away from sources of heat including direct sunlight and radiators.
- It should be kept away from sources of vibration or physical shock.
- The space should be accommodated with a properly grounded wall outlet, and with sufficient space to access the power supply cords.
- The operating environment temperature should be around 0°C to 40°C (32°F to 104°F).

Heed safety instructions: Before working with In Win IPC/Storage server products, we strongly recommend you use this guide as a reference and follow the safety instructions. The instructions in this manual will help you ensure and maintain compliance with existing product certifications and approvals. Follow the described, regulated components mentioned in this manual. Use of non-UL listing products or other regulators may not comply with product regulations in the region(s) in which the product is sold.

System power on/off: The power button DOES NOT totally turn off the system AC power. To remove the power of the system, you must unplug the AC power cord from the outlet or the system's power supply units. Make sure the power cord is unplugged before you open the chassis, add or remove any components.

Hazardous conditions, devices and cables: Hazardous electrical conditions can be present on/in power supply units and their cables. Disconnect the power cord and any other device attached to the server before opening the case. Failing to follow safety procedures will increase the risk of personal injury or equipment damage.

Electrostatic discharge (ESD) and ESD protection: In most cases, ESD may damage disk drives, electronic boards and other parts. We recommend that you conduct installation only at an ESD free space. If not possible, perform ESD protection protocol by wearing an anti-static wrist straps attached to the ground on any unpainted metal surface on your server during operation.

Installing or removing jumpers: A jumper is a short length conductor used to close, open or bypass part of an electronic circuit. Jumpers on In Win backplanes have a small tab on top that you can pick up with your fingertips. Grip the jumper carefully, and plug the jumper to cover the jumper pins on the backplane. Once you need to remove the jumper, grip the jumper and carefully pull without squeezing.

CAUTION

To avoid damage and maintain your safety, please read the following terms listed below:

1. No to populate hard drives and turn on the power before the system is settles down.
   Make sure hard drives and other components are properly connected before turning on the system.
2. Tighten or loosen all the screws with a screwdriver.
3. Apply the correct screws packed in the accessory box.
4. For your safety, please have at least two people lift and place the unit.
5. Before mounting the unit to the cabinet, make sure the rail is installed correctly.
6. When installing and removing any module or part, please use the handles.

Restricted Access Location

This server is intended for installation only in restricted access locations as defined where both these conditions apply:

- Access can only be gained by service persons or by users who have been Instructed about the reasons for the restrictions applied to the location and about any precautions that shall be taken.

- Access is through the use of a tool or lock and key, or other means of security, and is controlled by the authority responsible for the location.

SPECIFICATIONS

Model Name	**IW-RJ316-04**
Standard	EIA-RS310D
Dimensions (D x W x H) w/o Front Door	520.7 x 482.6 x 131 mm (20.5" x 19" x 5.25")
Storage	External: Hot-swap 3.5" x 16 (SAS 12Gbps)
Maximum Capacity	Up to 128 TB (Cascades to 3 enclosures with 48 HDDs, including 1 host server)
Power Supply	Supports ▪ Form Factor: Platinum CRPS redundant ▪ Watt: 550W
Cooling Fan	8038mm x 4
SAS 12G Module	1 or 2
Host/Expansion Port	3 x Mini SAS HD (SFF-8644) for each 12G expander module
Management	Smart fan, thermal monitor, HDD monitor, voltage monitor, alarm warning
SES	Supports SES-2 (SCSI Enclosure Service)
Maintenance	Supports management by Ethernet (Optional) and RS-232
HDD Power Management	HDD sequential power on
Temperature	0°C to 35°C
Material	Material: SGCC Thickness: 1.0 mm
Rail Kit	Fixed rail included. (Optional 20" tool-less & ball-bearing slide rail)

* The actual product is subject to change without prior notice. In Win Development Inc. reserves the right to make any final modifications.

1 Product Introduction

1.1 Box Contents

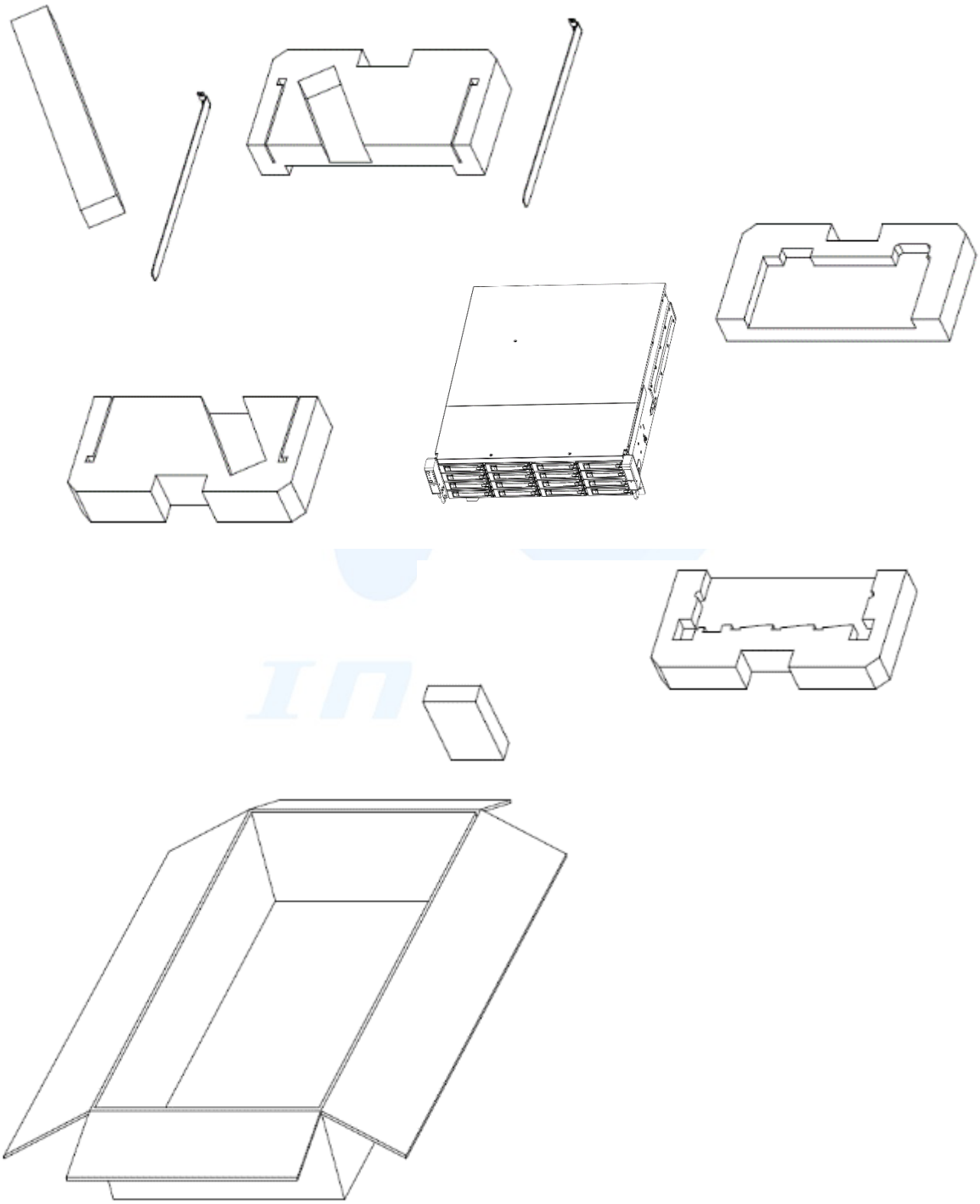

1.2 General Information

IW-RJ316-04 JBOD enclosure is a 3U rackmount storage chassis with 16 tray-less bays, dual expander module, dual fan module, and redundant 550W power supply. IW-RJ316-04 is capable of providing ample storage, while allowing users to cascade 3 enclosures with 48 HDDs, including 1 host server.

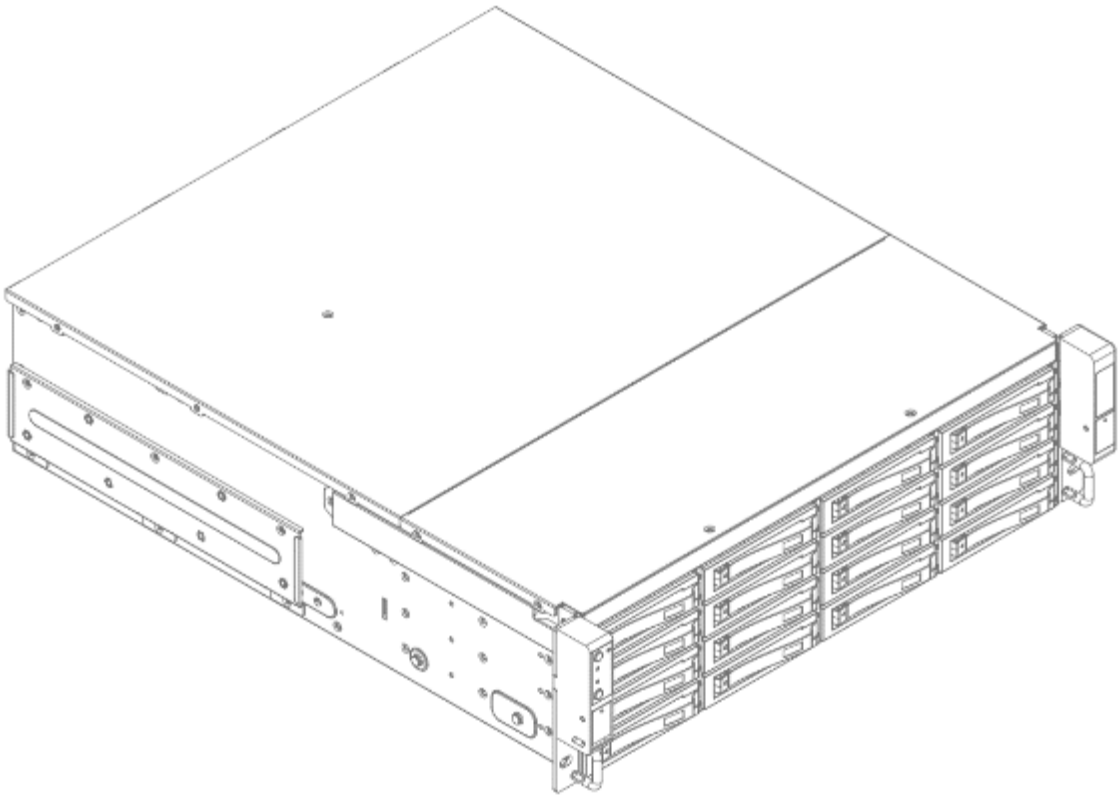

1.2.1 Front Panel Controls and Indicators

The front panel control buttons and LED indicators are located on the top left handle.

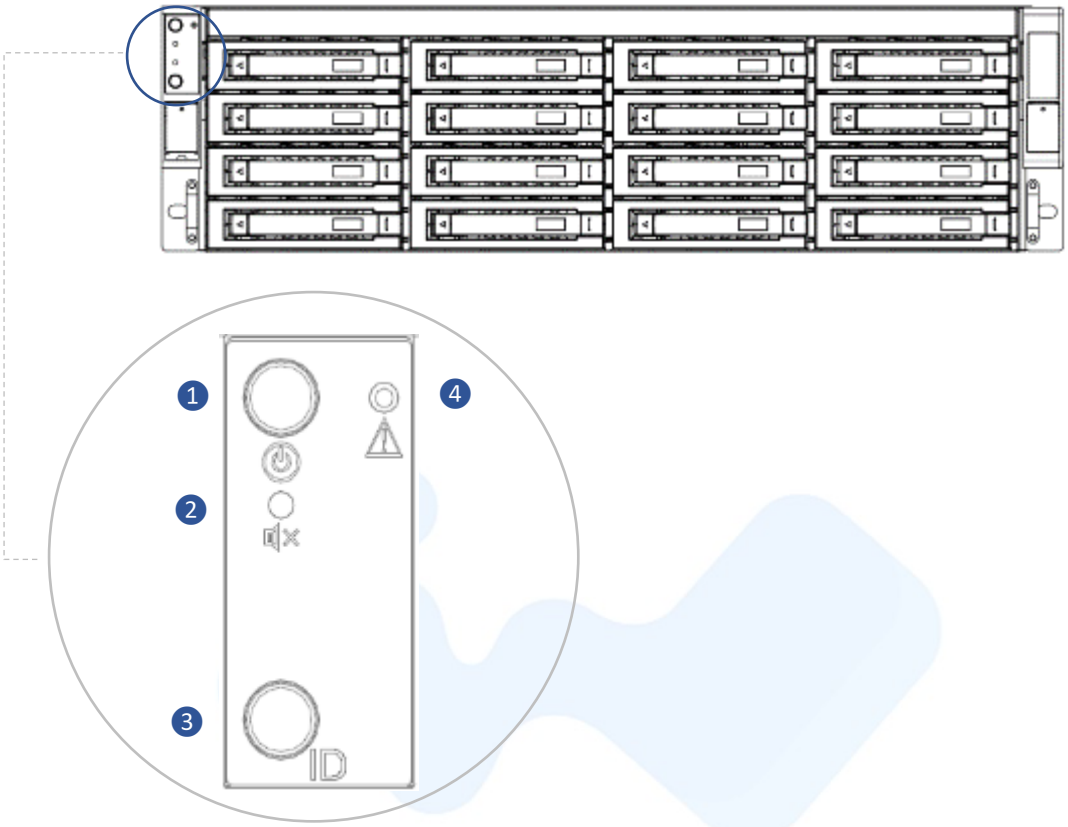

No.	Name	Color	Status	Description
1	Power On/Off Button with LED	Blue	Solid on	System is powered on
		N/A	Off	System is not powered on
2	Mute Button	N/A		Press the button to turn off the beeper
3	Chassis ID Button with LED	Blue	Solid on	Press the button to activate system identification
4	System Fail LED	Red	Solid on	System Fault (Beeper)

1.2.2 Rear Panel Configuration

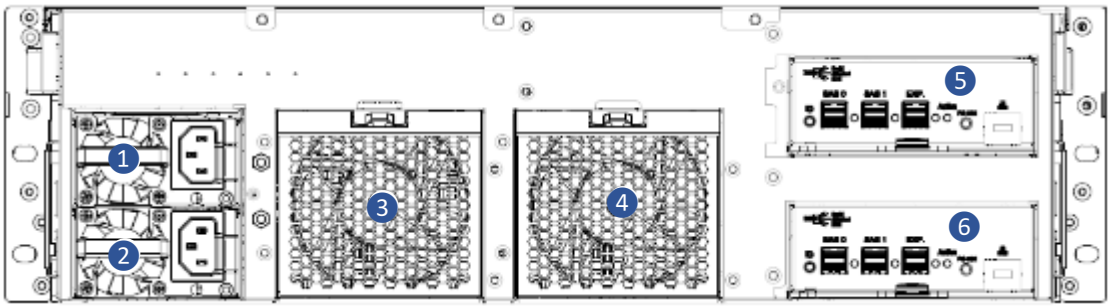

No.	Item
1	Power Module 1
2	Power Module 2
3	Fan Module 1

No.	Item
4	Fan Module 2
5	Secondary Expander Module
6	Primary Expander Module

1.2.2.1 Expander Configuration

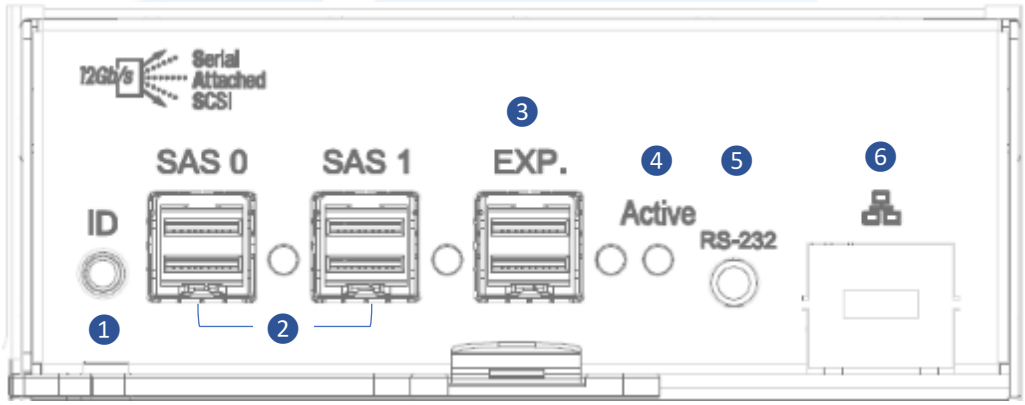

No.	Name	Color	Status	Description
1	Chassis ID button with LED	Blue	Solid on	Press the button to activate system identification
2	Uplink SAS Port	N/A		Host HBA/RAID card connection
3	Downlink Expander Port	N/A		External cascading
4	Expander Module Status LED	Blue	Blink	Normal
		Blue	No Blinking	Abnormal
5	RS-232 Port	N/A		Debug console connection
6	LAN	N/A		Ethernet remote monitoring (optional)

2 Hardware Installation

2.1 Removing and Installing a Hard Drive

IW-RJ series JBOD features tool-less trays. Users no longer need to use screws to mount disks, and can swap drives faster.

2.1.1 Installing a Hard Drive

Step 1: Press the release button then pull outward on the handle.
Step 2: Place the 3.5" HDD into the tray.
Align the HDD screw with the two pins on the side of the tray.
Press the other side of HDD downward to the tray.
Step 3: Insert the HDD tray to the slot.
Step 4: Push back the lever until it clicks.

Step 1

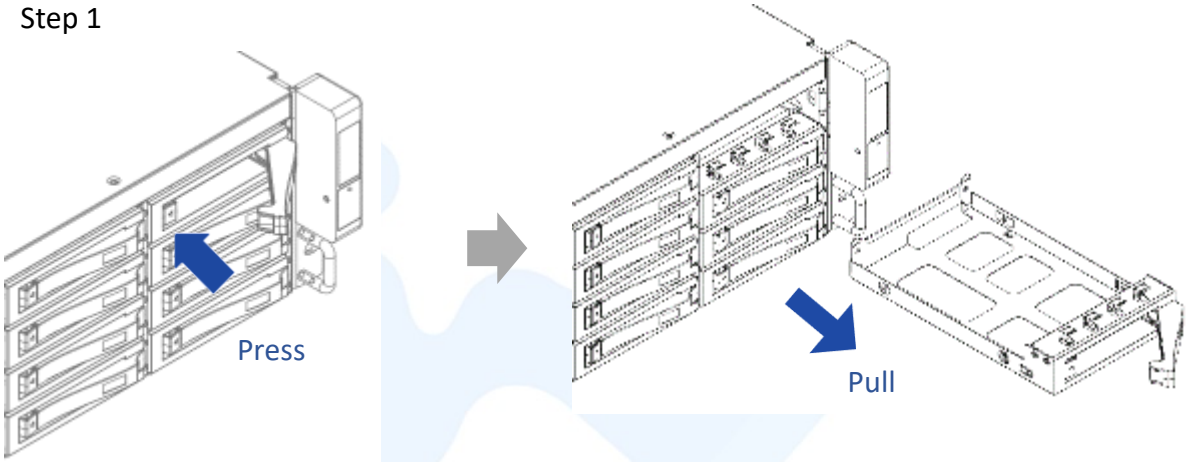

Step 2

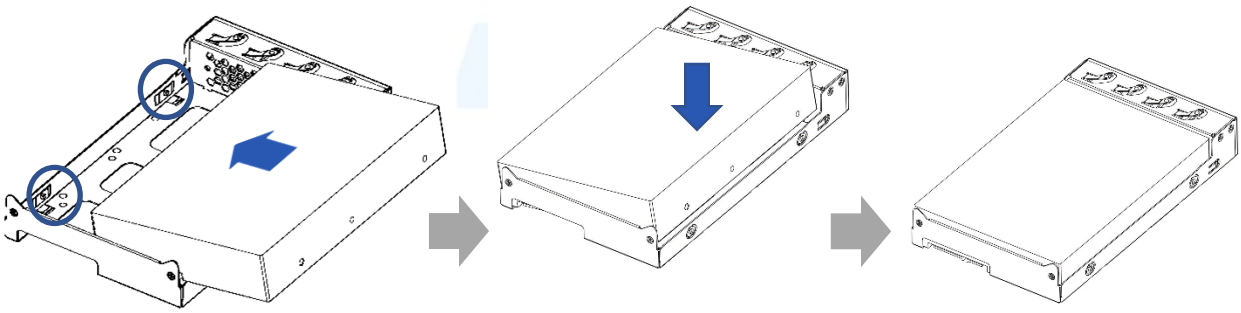

Step 3

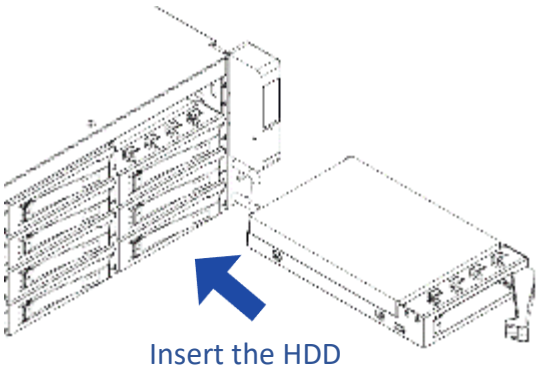

Step 4

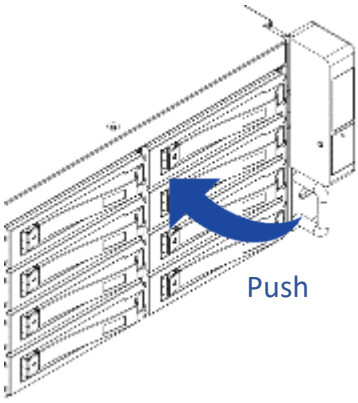

2.1.2 Removing a Hard Drive

Step 1: Press the release button then pull outward on the handle.

Step 2: Press the HDD out of the bottom of the tray with your fingers.

Step 3: Pull out the hard drive.

Step 1

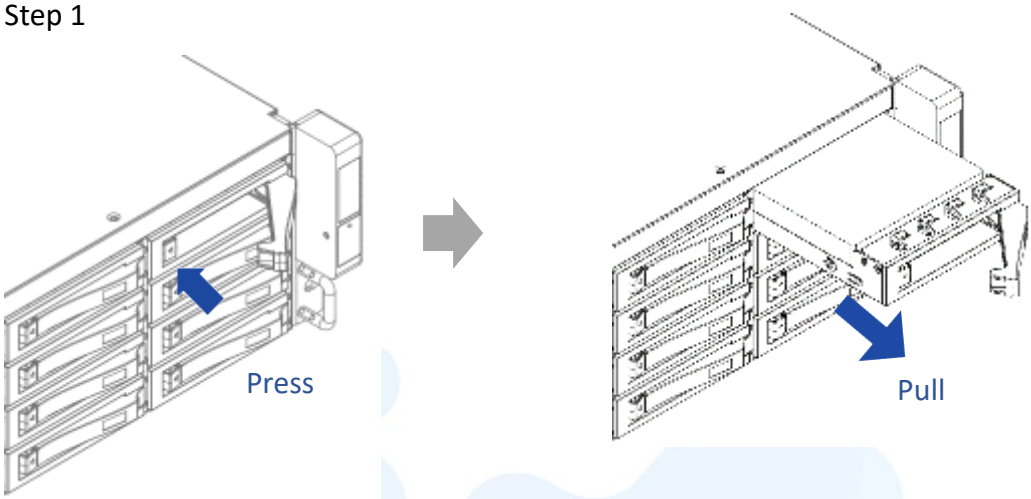

Step 2

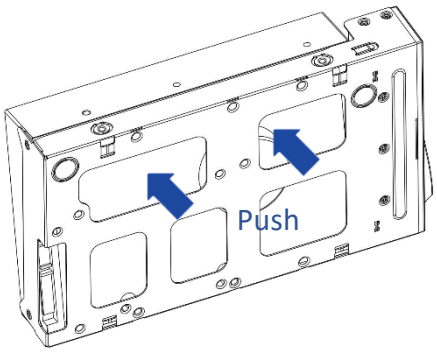

Step 3

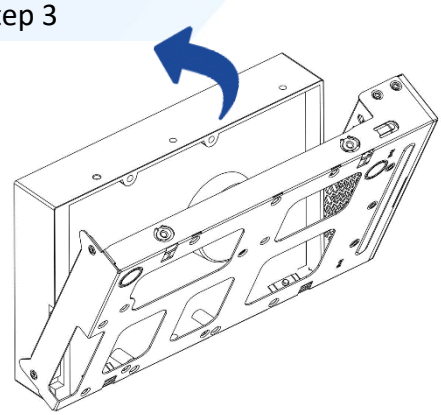

2.2 Removing and Installing the Fan Module

IW-RJ series JBOD has built-in dual fan modules that support hot-swappable and redundant features. With a tool-less design, IW-RJ series JBOD is easy to maintain.

2.2.1 Removing the Fan Module

Step 1: Press the clip to release the fan slot.

Step 2: Pull out the fan module from the fan slot.

Step 1

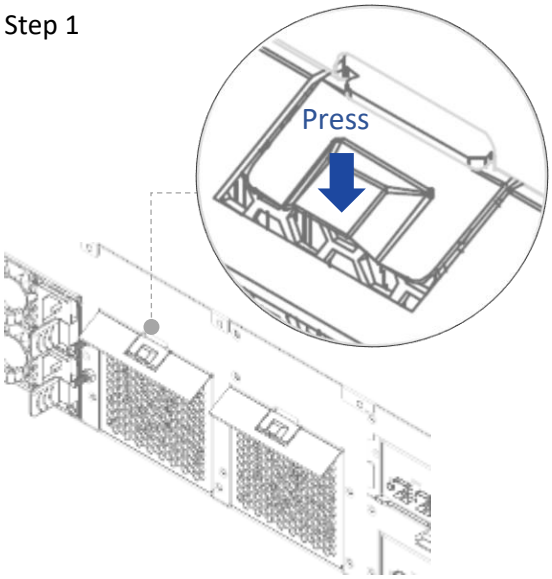

Step 2

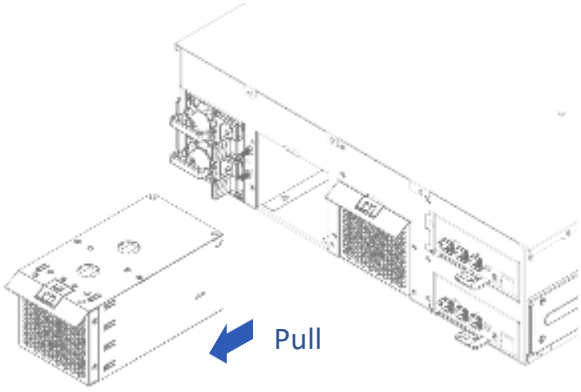

2.2.2 Installing the Fan Module

Step 1: Push the fan module back into the slot until it clicks.
Step 2: Connect the fan to the backplane.

Step 1

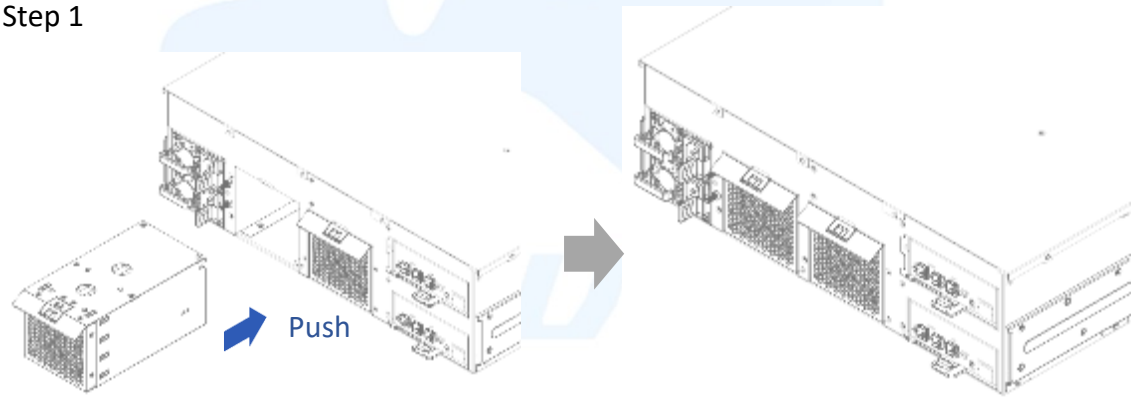

2.3 Removing and Installing the PSU Module

The IW-RJ316-04 hosts a built-in redundant power supply module. With this function, the system is capable of still functioning if one of the modules fail. To replace it, the user only needs to release the failed module, then insert a functional module.

2.3.1 Removing the PSU Module

Step 1: Press the release tab of the power supply unit's module at the back.
Step 2: Pull the module out using the handle.

Step 1

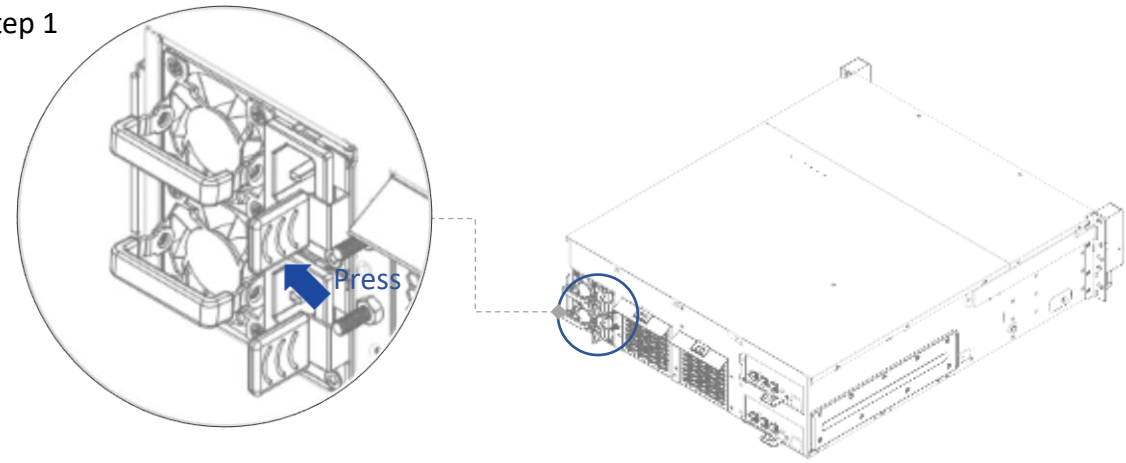

Step 2

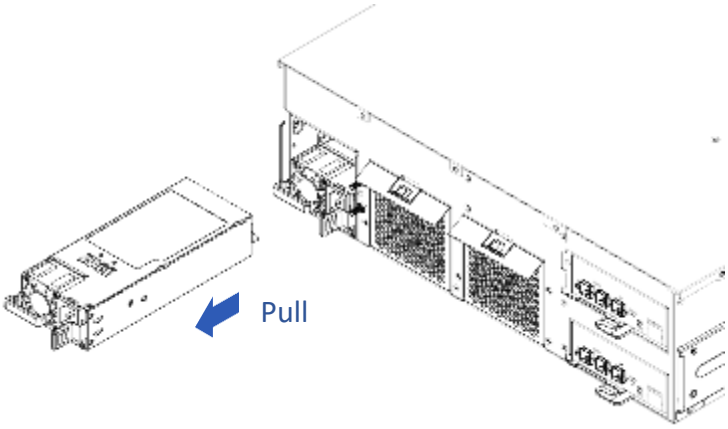

2.3.2 **Installing the PSU Module**

Step 1: Make sure the label is facing upward, and push the power supply module into the cage until it clicks.

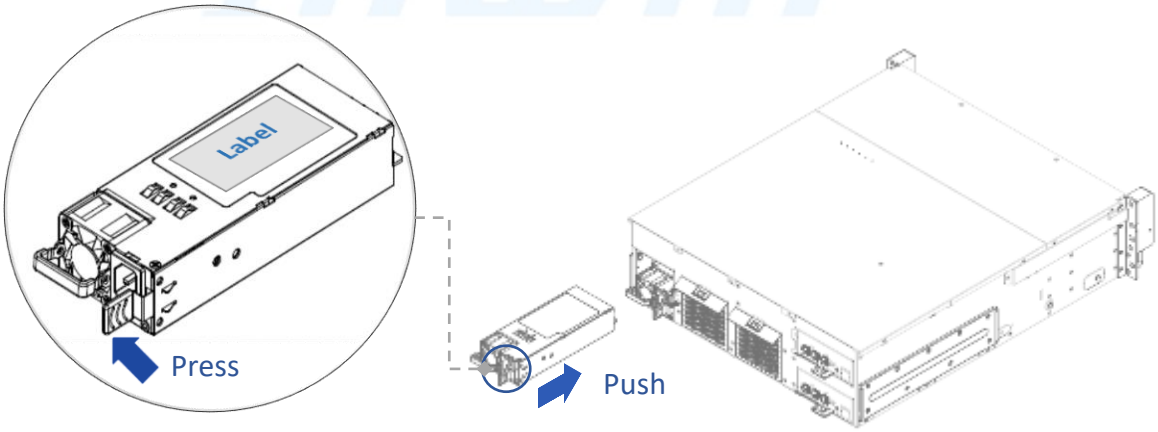

NOTE: ***1. The unit supports In Win PSU modules only, please do not attempt to insert any other brands of modules.***

2. The two PSU modules' output wattage must be the same.

2.4 Removing and Installing the Expander Module

In Win IW-RJ series JBOD contains a set of redundant expander modules. The bottom module is the primary expander, while the upper is the secondary. The primary expander module includes an Ethernet management module, which allow users to monitor and manage the system through Ethernet. Also, the redundant module can minimize downtime should any on the expanders fail.

2.4.1 Removing the Expander Module

Step 1: Press the clip of the expander module and swivel the handle outward.
Step 2: Pull out the expander module.

Step 1

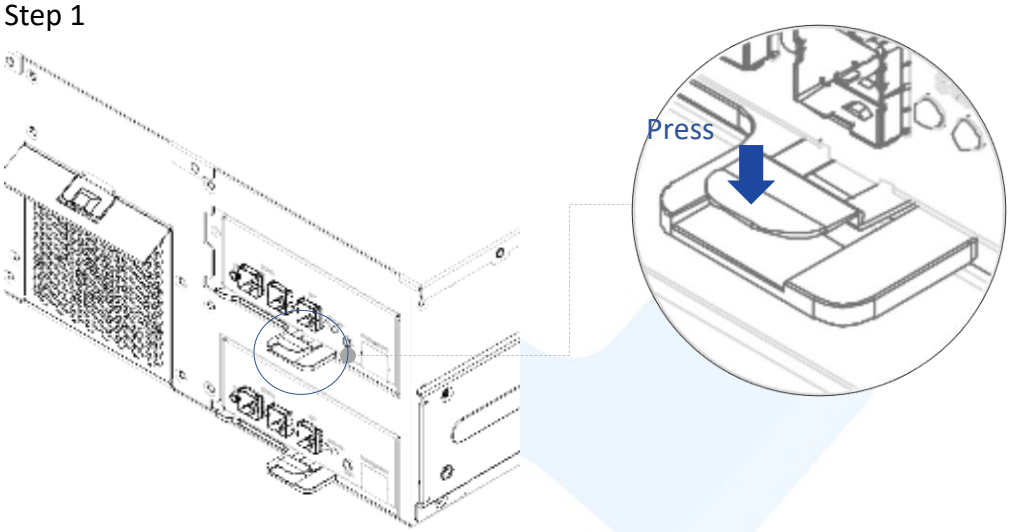

Step 2

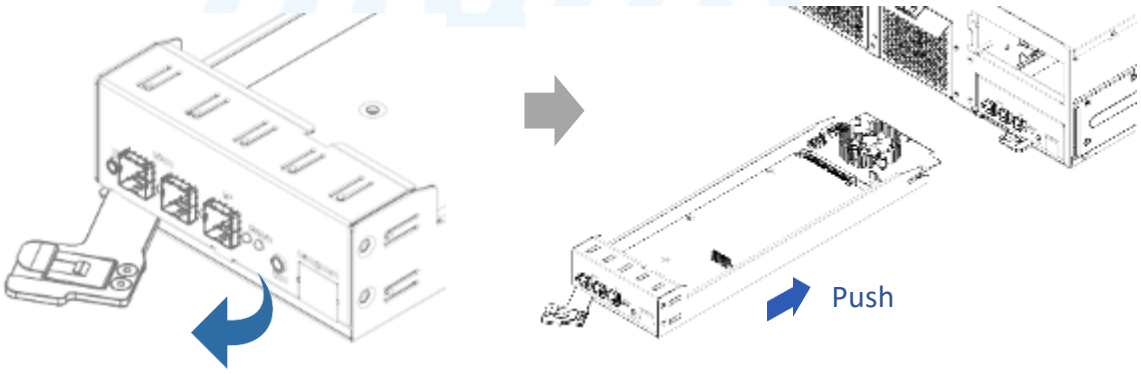

2.4.2 Installing the Expander Module

Step 1: Push the expander module into the cage until it clicks back the original location.

Step 2: Swivel the handle back to lock into position.

Step 1

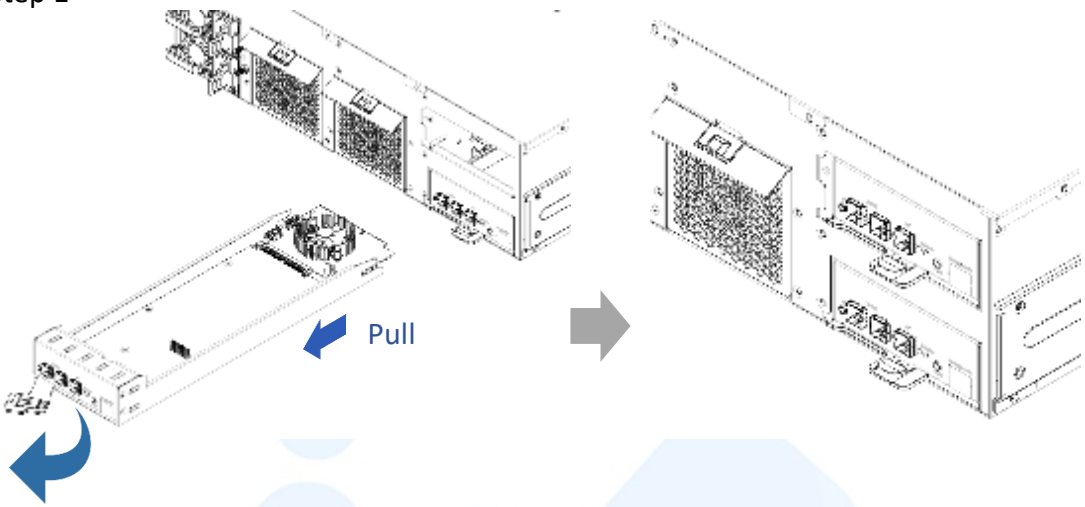

2.5 Rail Installation

IW-RJ series JBOD is a rackmount model, which support EIA-RS310D standard cabinets and chassis racks. In Win provides standard fixed rails or optional slide rails for mounting the JBOD chassis to cabinets.

2.5.1 The Type of Rail Kit

Please follow the instructions to install the rails on the cabinet or chassis rack according to the rail type you ordered.

2.5.2 Fixed Rails

Step 1: Insert the fixed rail into the rail bracket from the end of the chassis.

Step 2: Tighten the screws to secure the rail and the chassis on the cabinet.

Step 3: Repeat the same action on the other side.

Step 1

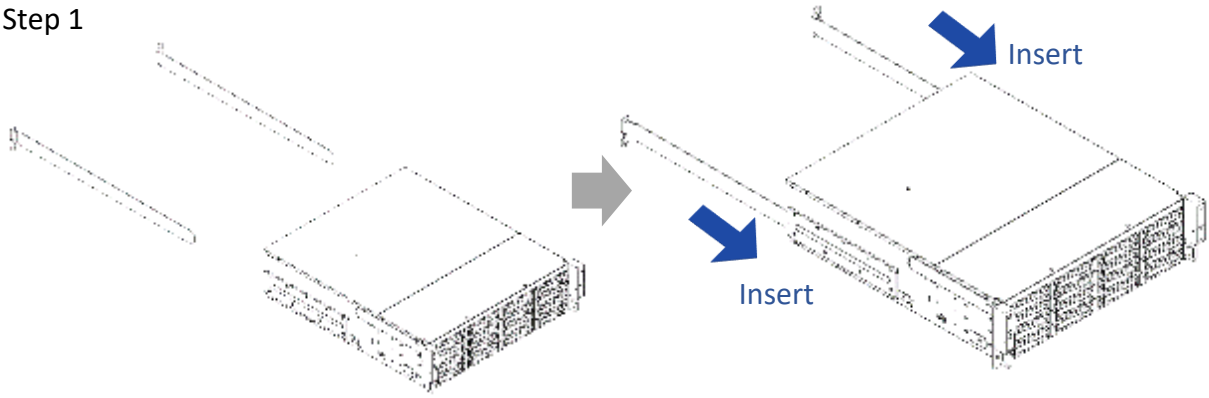

2.5.3 Slide Rail

2.5.3.1 Take out the Inner Rail and Slide the Intermediate Rail Back

Step 1: Pull out the inner rail until it reaches the stop. Release the blue slide tab to unlock.

Step 2: Continue pulling the inner rail until the second stops. Release the white slide tab to remove the inner rail.

Step 3: Pull the latch on the middle rail upward and retract the middle rail back.

Step 1~2

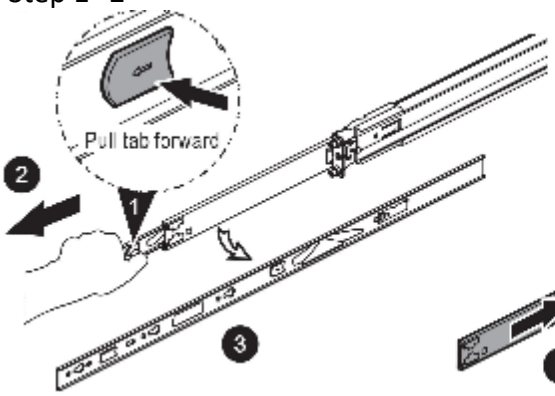

Step 3

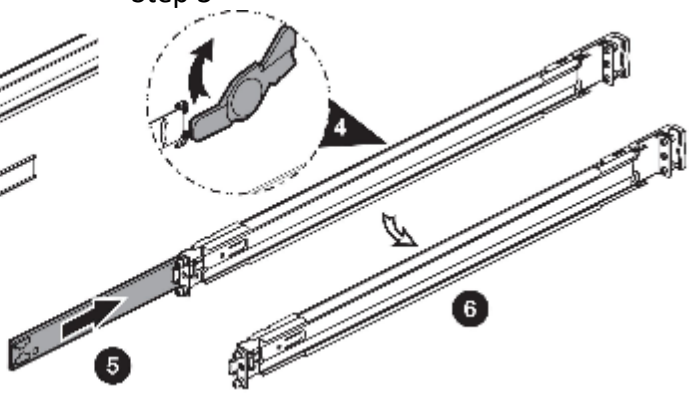

2.5.3.2 Attach the Inner Rail to the Chassis

Step 1: Remove the fixed rail brackets on both sides to reveal the standoffs.

Step 2: Align the chassis sidewall standoffs to the inner rail keyholes. Slide the inner rail toward the front until the standoff snaps into place, securing the rail to the chassis.

Step 3: Repeat the same action on the other side.

Step 4: When removing the inner rail:

Pull up the latch and slide the inner rail forward. Remove the keyhole from the standoff to detach the inner rail. (Action ❶ and ❷ in the figure)

Step 1

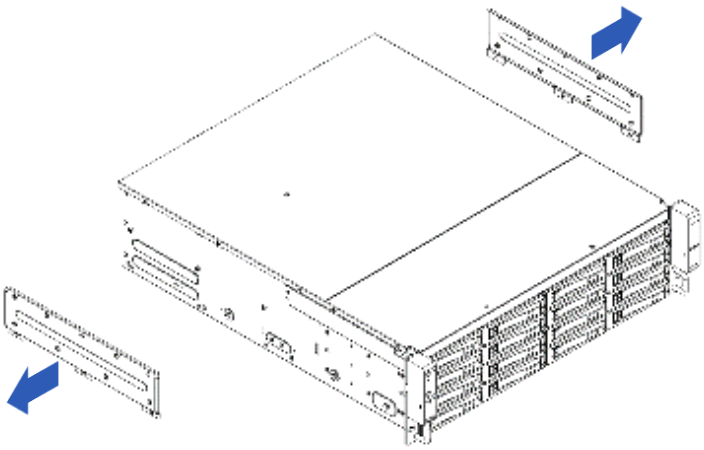

Step 2

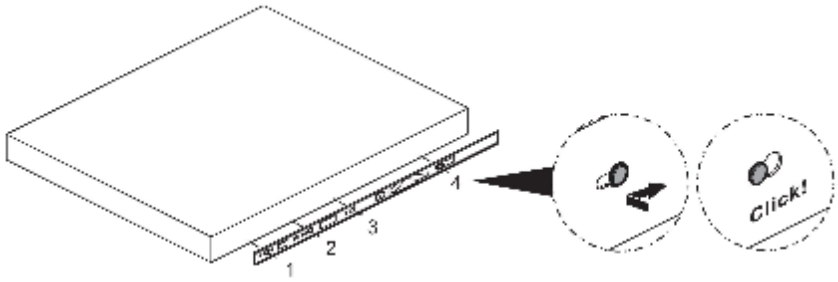

Step 4

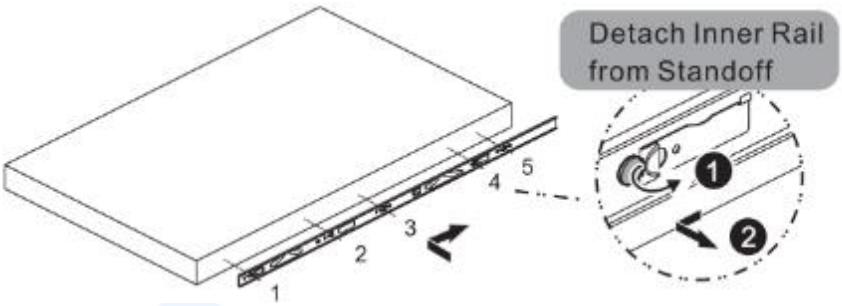

2.5.3.3 Mount the Rail Bracket to the Cabinet

Step 1: Extend the rail bracket over the rear rack of the cabinet.

Step 2: Pull out the rear hook on the end of the outer rail, align and push the rail bracket pins into the post holes on the rack. Then, pull back the hook on the end of the outer rail.

Step 3: Extend the opposite side of the rail bracket to the front rack of the cabinet.

Step 4: Hang the front hooks of the outer rail at the front of the rack post holes. Pull the rail bracket pins that go into the front post holes on the rack until they click.

Step 5: The other side of the rail is symmetrical, repeat the installation steps 1-4.

Step 6: Once you would like to detach the bracket, pull outward on the front and rear hooks of the outer rail to release the bracket. Repeat the same action to the other side.

Step 1~4

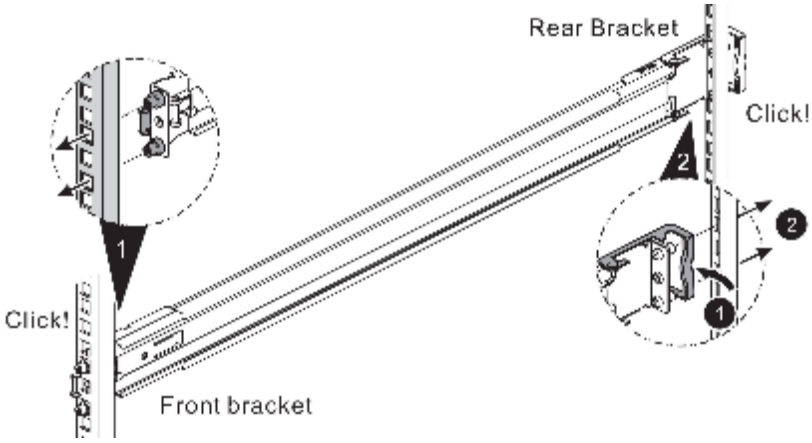

Step 6

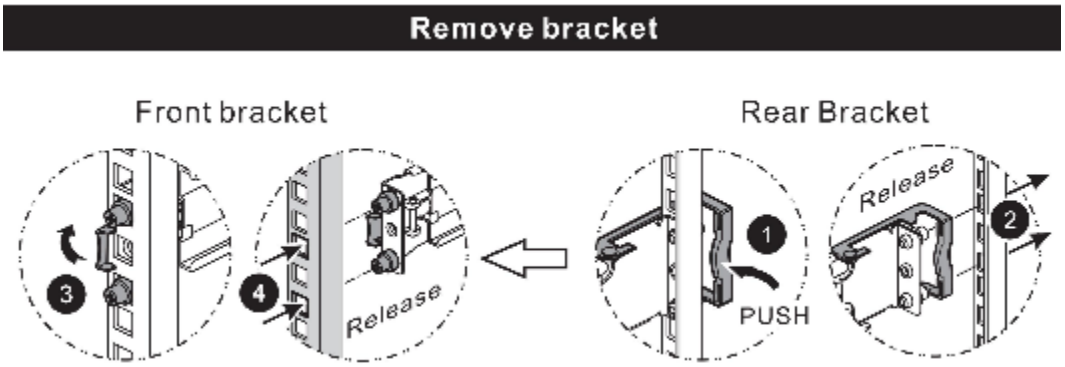

2.5.4 **Insert the Chassis to the Cabinet**

Step 1: Pull out the middle rail to the stop position.

Step 2: Move the ball bearing retainer to the front end of the middle rail, it should click into the locked position.

Step 3: Insert the inner rails of the chassis into the middle rails on the both sides of the rack.

Step 4: Push the chassis to the stop position, then release the blue slide tab (by either pulling the tab forward or pushing the tab back) to continue.

Step 5: Until reaching the second stop position, release the blue slide tab again to continue.

Step 6: Push the chassis into position on the rack completely. Make sure that the front end of the chassis is aligned with the edge of the rack to complete the installation.

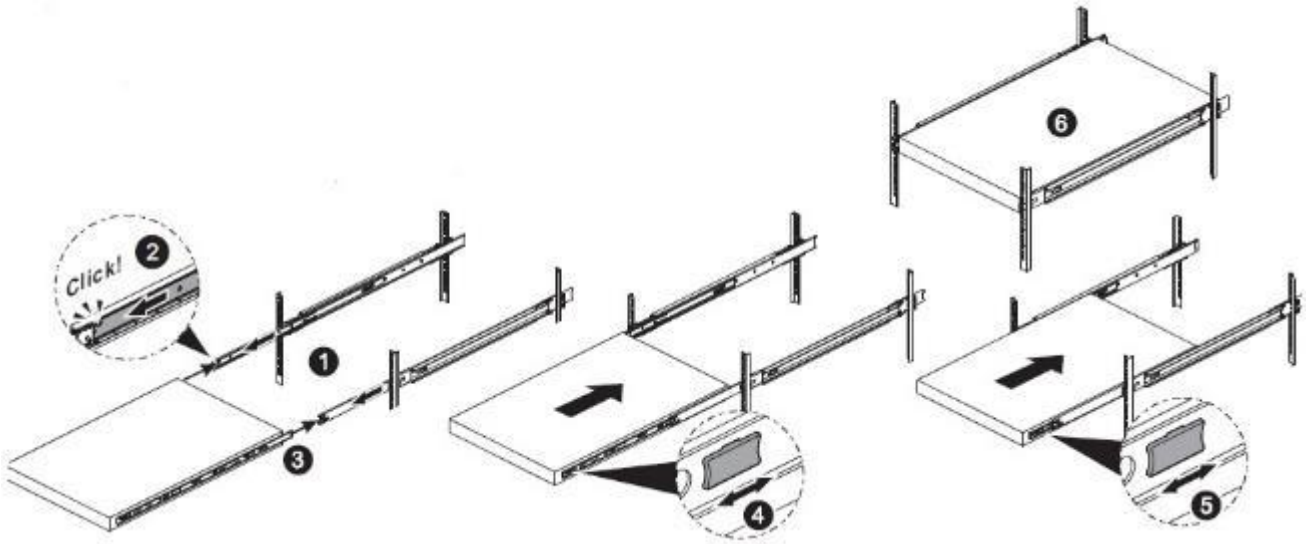

3 Expander Board Introduction

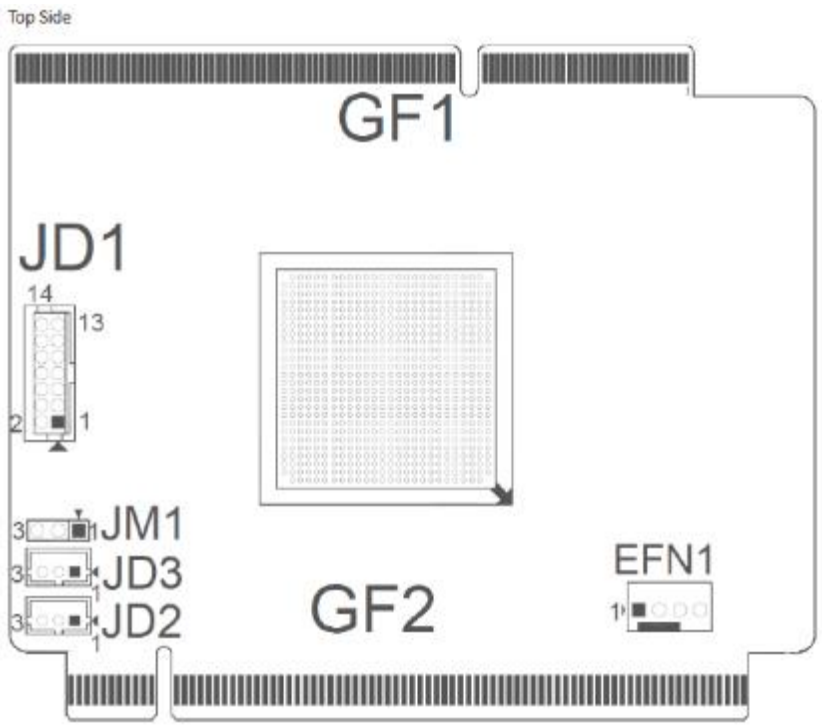

Location	Description
GF1	BP Golden Finger Connector
GF2	IO Board Golden Finger Connector
EFN1	Expander FAN Connector
JM1	Single/Dual Power Module Select: Single: Jumper 1-2; Dual: Jumper 2-3
JD1	ICE Debug Port
JD2	Smart Console
JD3	Debug Port

4 Ethernet Management Card Introduction

Top Side

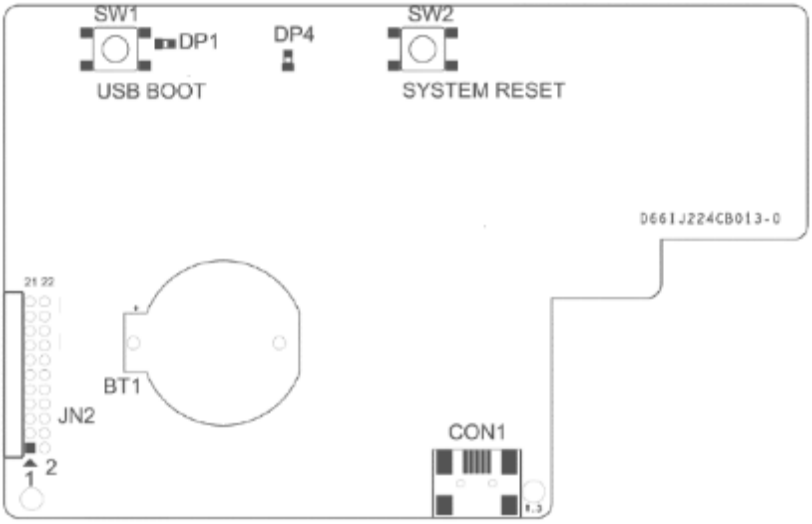

Bottom Side

Location	Description
SW1	USB Reboot
SW2	System Reset
DP1	Power LED
DP4	MCU Status LED
JN2	UART Port
CON1	USB Port
JN1	UART Port
CON2	Ethernet Port

5 User Interface Introduction

5.1 Overview

IN WIN JBOD System is a high performance, reliable storage system with sensors to monitor system health. We provide state-of-the-art management functionality for users to monitor and manage JBOD systems efficiently and flexibly. Users can manage JBOD systems through serial port and/or Ethernet according to the system configuration on the system. We support varieties of network protocols for network management including Telnet, SSH, Web-GUI, SNMP and SMTP. We also support active system alert function by sending information to the email addresses specified in the system, so the users can be informed any changes of the systems in a timely manner.

This users' manual is for all IN WIN JBOD systems including RJ-212, RJ-316 and RJ-424. It provides the information and instruction of frequent use function. Please refer to the table of contents to find the topics.

In Win JBOD system shares the same expander user interface. Please use the following image of RJ-224-03 as an example. The actual product's model will appear when the program is executed.

5.2 Key Features

- **Reliable High Data Rate support (up to 12Gbps)**
  SAS 12Gbps support and SATA3 6Gbps support to provide a reliable high-performance data rate.

- **Dual Expanders Support**
  System can accommodate dual expanders to support data redundancy capability.

- **Power Redundancy**
  System can accommodate 2 PSUs with PMBus as redundancy. Either PSU can work independently while the other is failed.

- **Hot-swappable PSU**
  The hot-swappable PSU doesn't require a system shutdown for PSU replacement in case of a PSU failure.

- **Hot-swappable Fan Modules**
  The hot-swappable fan module doesn't require a system shutdown when swapping modules.

- **System Fault Alarm**
  System Fault red LED indicator on the front panel illuminates and Buzzer sounds while there is system fault.

Buzzer sounds differently according to the system fault. Please see the below the definition:

- High Temperature: 1 short beep
- PSU failure: 2 short beeps
- Fan failure: 3 short beeps

The beeps can be muted by pressing the mute button on the front panel.

- **Hot-swappable HDDs**

  The HDD is hot-swappable. No need to shutdown system for HDD installation and/or replacement while there is HDD failure happens or intend to add new HDD to the system.

- **Smart Fan Control**

  The fan modules are smartly controlled by the firmware to provide 7 levels speeds according to the system temperature detected by the temperature sensors on expander chips and Backplane.

- **Zoning**

  System support the feature to divide disk drives into 2 different groups. Each group can own users-configurable number of HDDs independently. This feature enables single JBOD serving 2 hosts.

- **Cascading**

  There is a cascading port on Expander for cascading another JBOD system to expand disk space whenever the system is running out of space.

5.3 Software Management

5.3.1 System Management Structure

IN WIN JBOD Systems support out-of-band Network Management feature enabling rich set of protocols and a flexible way for SAS Expander management anytime from anywhere.

5.3.1.1 With Ethernet Management

In this configuration, when there is an Ethernet board on top of the Primary SAS Expander module, users can manage Primary and Secondary SAS expanders through RS-232 port no matter the serial console is connected to Primary or Secondary SAS Expander module.

With proper IP address setting, Users can manage system through Telnet, SSH, Web-GUI and SNMP remotely.

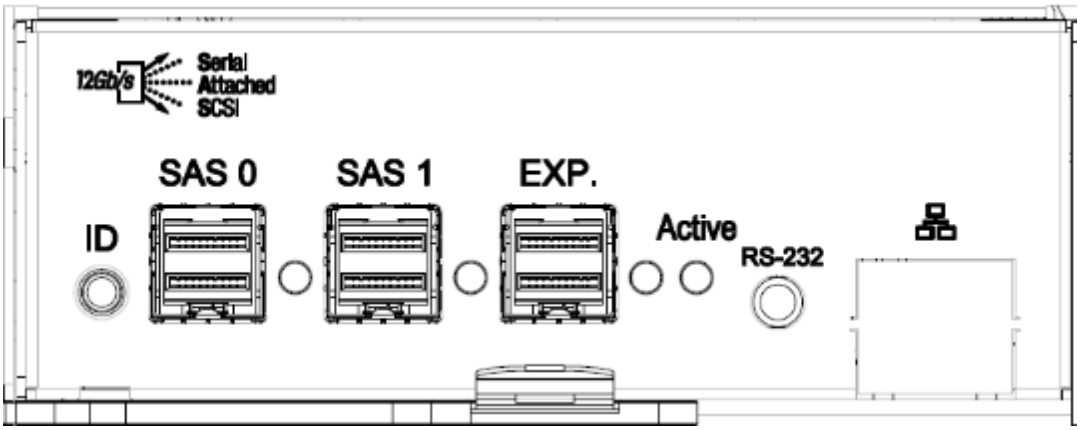

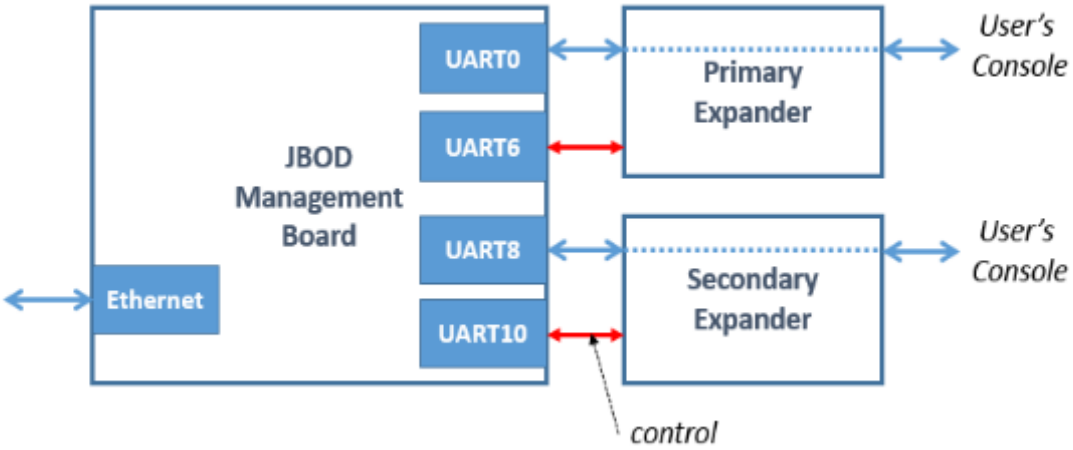

5.3.1.2 Without Ethernet Management

In this configuration, when there is no Ethernet board, Users can only manage Primary or Secondary SAS Expanders by connecting serial console cable to Primary or Secondary SAS Expander module separately. And, in such configuration, Users won't benefit from the rich set of network protocols management.

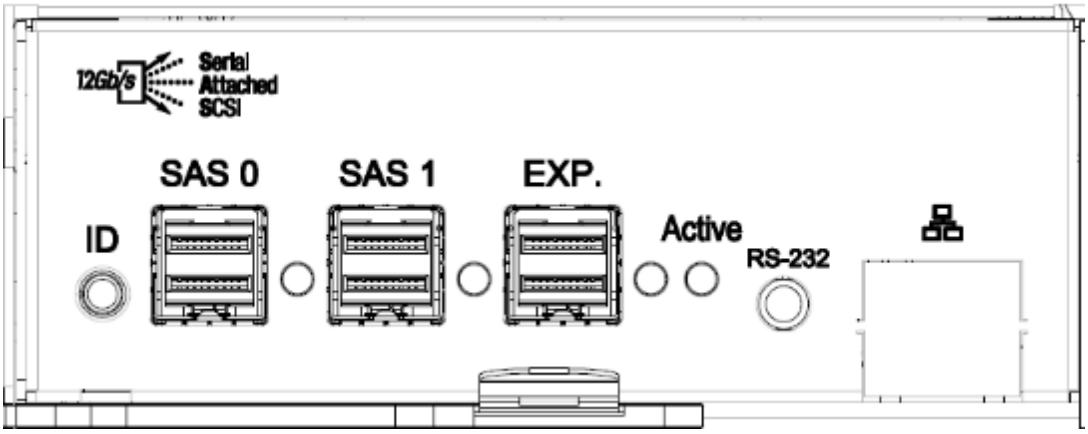

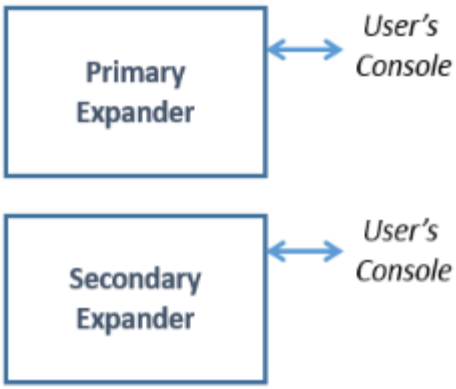

5.3.1.3 Network Protocols Support

As an Ethernet Management board exists, rich set of network protocols are leveraged for flexible remote management. The supported protocols are Telnet, SSH, Web-GUI, SNMP and SMTP.

Please be sure the IP address of the system is correctly configured to enable network management. Our systems support Static IP address or DHCP dynamic IP address as per users' configuration.

5.3.1.4 Operation Modes

IN WIN JBOD systems Ethernet Management provide a flexibility of modes for different scenarios by simply applying CLI commands to change.

Ethernet management support 2 modes – Normal Mode and Alone Mode.

Normal Mode:

One Ethernet board in a JBOD enclosure. It can be either only one SAS Expander or 2.

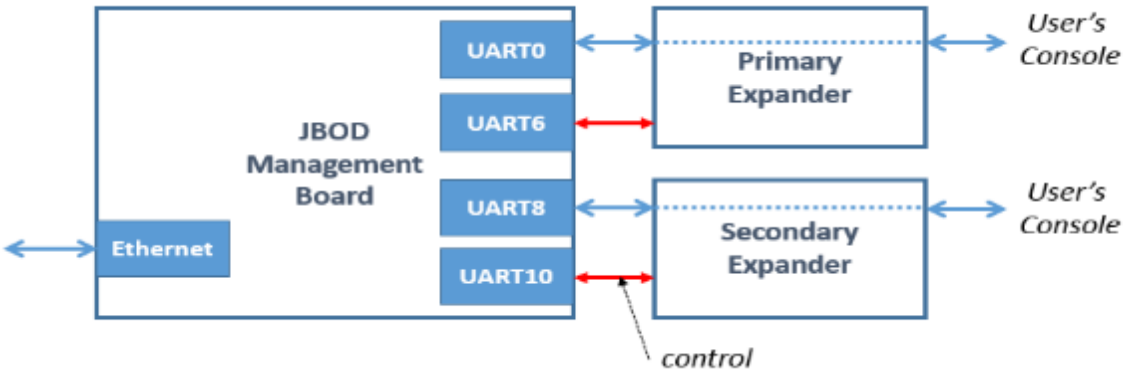

In this mode, users can manage both SAS Expander by only one Ethernet board. This is the default operation mode of the Ethernet mgmt. board. To check the operation mode, applying hidden command "save alone" to view. "save alone 0" for Normal mode.

```
/mgmt.s#
/mgmt.s# save alone
Expander mode: 0
/mgmt.s#
/mgmt.s#
/mgmt.s# save alone 0
Expander mode: alone off
/mgmt.s#
/mgmt.s#
```

Whenever the Ethernet mgmt. board run in Normal mode. There are 2 sub-directories “Primary” and “Secondary” being seen and users can change directory to then for SAS Expander management.

```
/mgmt.s#
/mgmt.s# list
?          dns        ipaddr     ntp        primary    secondary  timezone   userdel
date       gateway    mail       passwd     reboot     service    upgrade    userlist
dhcp       help       netmask    ping       save       snmp       useradd    version
/mgmt.s#
/mgmt.s# cd primary/
/mgmt.s/primary#
/mgmt.s/primary# list
?              iicw           reset          sys
adcread        iicwr          rev            t.QA
buffsize       isrstat        rperm          t.SDP
c.pddl         led            rreg           t.alarm.count
c.syscfg       log            rtr            t.dslot
c.zone         memstat        sasaddr        t.fan
cableinfo      mirror         scedebug       t.fan.forcespeed
cfg            mr16           serdesinfo     t.fan.simu
clearlogs      mr32           sesdebug       t.temp.simu
cleartrace     mr8            sgpioinfo      t.thermal
coredump       mw16           sgxinfo        thread
counters       mw32           showlogs       trace
date           mw8            showmfg        tracecap
debuginfo      nvlogs         showpost       tracemask
edfbinfo       phyinfo        showtrace      tracesev
encinfo        phyop          smpireq        tracetimestamp
eyescope       phytest        sspiinq        wppminfo
flashtblinfo   rdcfg          sspir          xmem
help           reg            sspiw
iicr           regerase       ssptdebug
/mgmt.s/primary#
```

Discrete Mode:

Ethernet Board to manage the SAS Expander it resides. There should be Ethernet board on any SAS Expander so it provides Network Management capability.

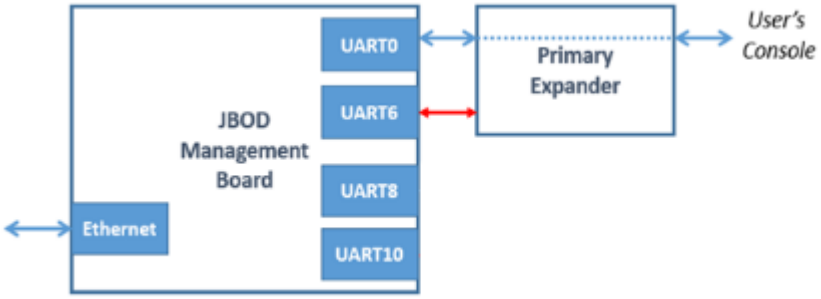

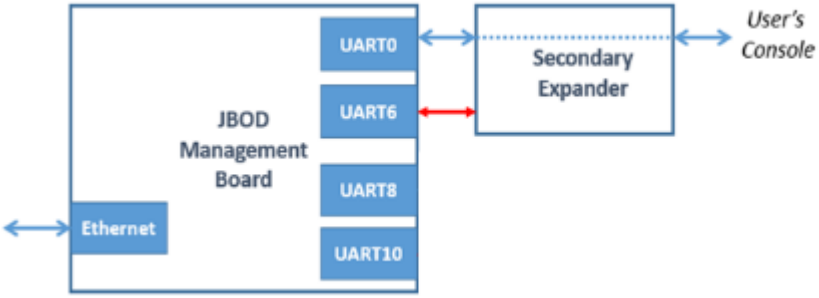

In this mode, users can manage the SAS Expander the Ethernet board resides on. Users will need 2 Ethernet board to manage both SAS Expander through network.

To check the operation mode, apply hidden command “save alone” in /mgmt.s# layer to view.

```
/mgmt.s#
/mgmt.s#
/mgmt.s# save alone
Expander mode: 1
/mgmt.s#
```

To enable the Alone mode, simply apply a hidden command “save alone 1” in /mgmt.s# layer to enable.

```
/mgmt.s#
/mgmt.s#
/mgmt.s# save alone 1
Expander mode: alone on
/mgmt.s#
```

To disable the Alone mode (set to Normal mode), simply apply a hidden command “save alone 0” in /mgmt.s# layer to disable.

```
/mgmt.s#
/mgmt.s# save alone 0
Expander mode: alone off
/mgmt.s#
/mgmt.s#
```

Please be sure to enable Alone mode on both Ethernet mgmt. boards and do a system reboot so the Alone mode can work properly.

Whenever the Ethernet mgmt. board run in Alone mode. There is only one sub-directory “Expander” can be seen and jump to it for SAS Expander management.

```
/mgmt.s#
/mgmt.s#
/mgmt.s# list
?          dns        help       netmask    ping       service    upgrade    userlist
date       expander   ipaddr     ntp        reboot     snmp       useradd    version
dhcp       gateway    mail       passwd     save       timezone   userdel
/mgmt.s#
/mgmt.s# cd expander/
/mgmt.s/expander# list
?                  iicw               reset              sys
adcread            iicwr              rev                t.QA
buffsize           isrstat            rperm              t.SDP
c.pddl             led                rreg               t.alarm.count
c.syscfg           log                rtr                t.dslot
c.zone             memstat            sasaddr            t.fan
cableinfo          mirror             scedebug           t.fan.forcespeed
cfg                mr16               serdesinfo         t.fan.simu
clearlogs          mr32               sesdebug           t.temp.simu
cleartrace         mr8                sgpioinfo          t.thermal
coredump           mw16               sgxinfo            thread
counters           mw32               showlogs           trace
date               mw8                showmfg            tracecap
debuginfo          nvlogs             showpost           tracemask
edfbinfo           phyinfo            showtrace          tracesev
encinfo            phyop              smpireq            tracetimestamp
eyescope           phytest            sspiinq            vppminfo
flashtblinfo       rdcfg              sspir              xmem
help               reg                sspiw
iicr               regerase           ssptdebug
/mgmt.s/expander#
```

5.3.2 Serial Port Management

RS-232 port on Expander module provides a serial connection for users to manage JBOD system with terminal application such as Tera Term, Hyper Term…etc. To manage JBOD system through serial port, the settings below have to be properly configured to make it work.

Baud Rate	: 115200
Data	: 8 bit
Parity	: None
Stop Bit	: 1 bit
Flow Control	: None

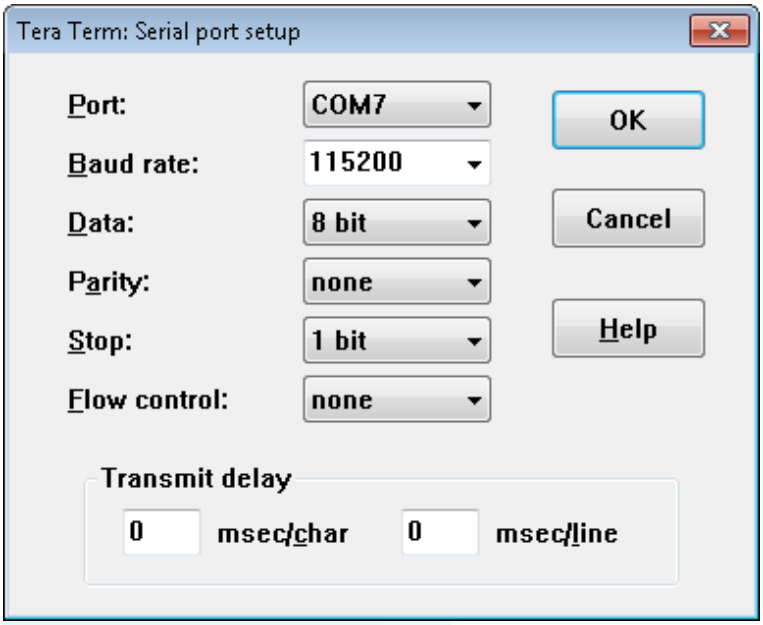

5.3.2.1 CLI

Depending on the system configuration, there are 2 scenarios of CLI usage will be met. One is Expander with Ethernet management board and the other is Expander w/o Ethernet management board.

5.3.2.1.1 Scenario 1: Expander with Ethernet board

As an Ethernet Management board exists, rich set of network protocols are leveraged for flexible remote management. The supported protocols are Telnet, SSH, Web-GUI, SNMP and SMTP.

- "/mgmt.s#" prompts in Console Terminal means the system is with Ethernet board installed which supports Network management with properly configured IP address.
- When "/mgmt.s#" prompts, Users are on the layer of the Ethernet board configuration. Users can configure IP address, manage users account, control services, reboot system…etc. on this layer.
- "list" command to display all the Ethernet layer commands the system supports.
- "?" for Help.

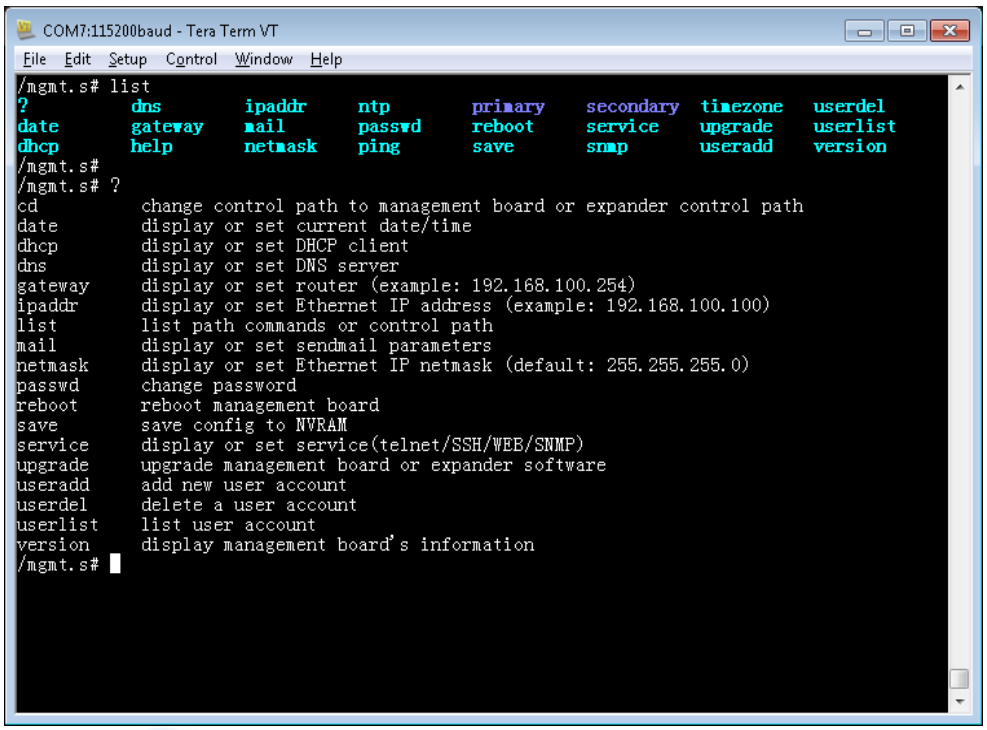

- "version" command to display system hardware, firmware version information.

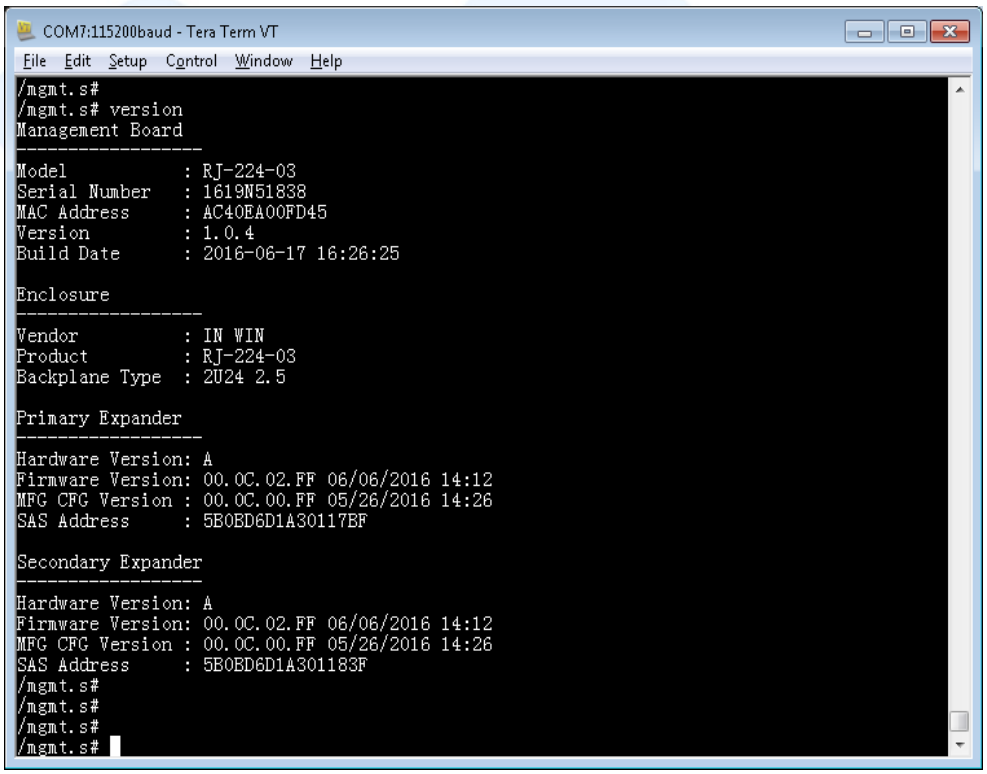

- Type "<command>" for displaying the current setting of the specific command.
- Type "<command> ?" for displaying specific command usage.

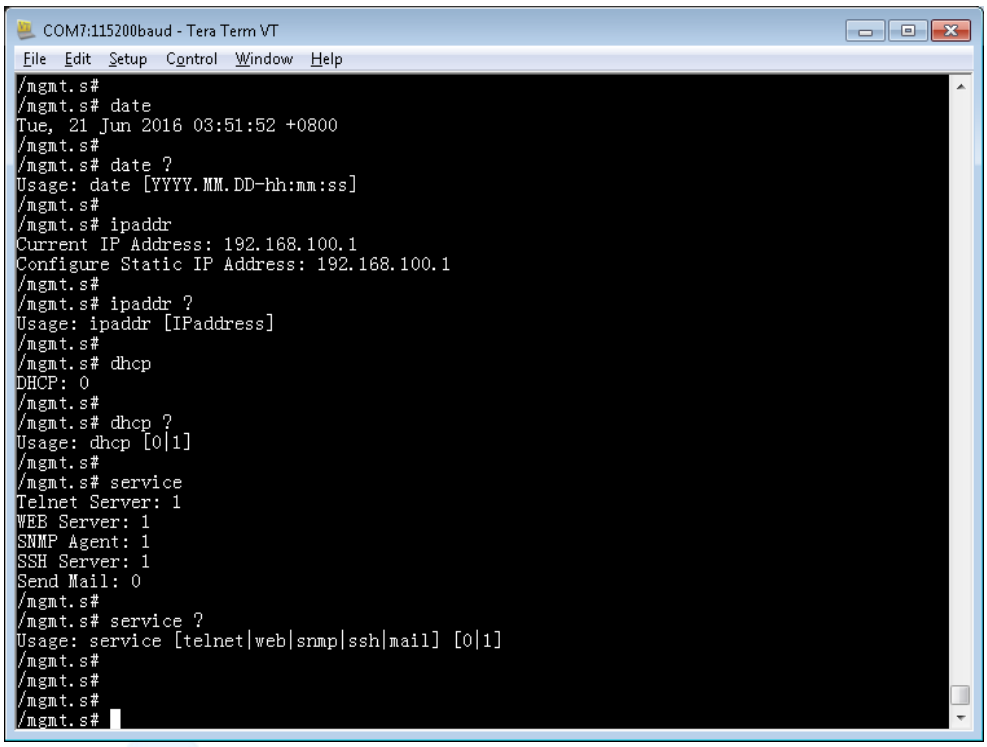

- “cd primary” to change directory for primary expander management.
- “cd ..” to change directory back to upper layer. Usually used on changing from expander layer back to Ethernet layer.
- “cd secondary” to change directory for secondary expander management.

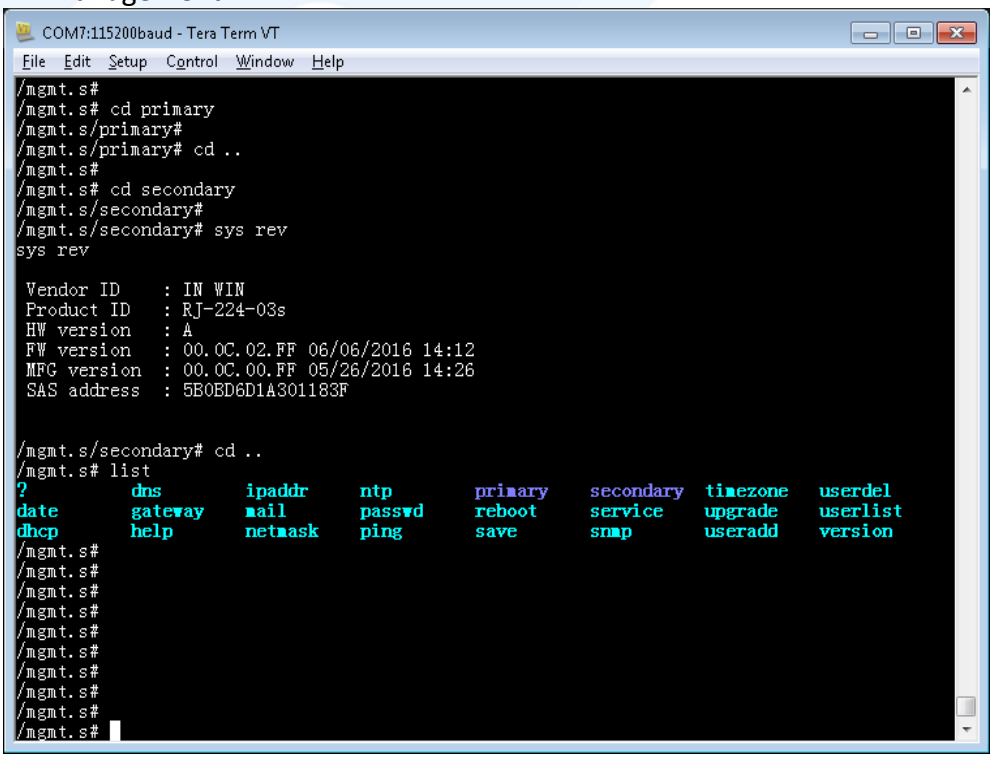

- The changes have been made would take effect immediately as the running-config.

- Please be sure to apply “save” command so the changes being made would be saved for use in next reboot as the start-config. Or, the changes would lose.

5.3.2.1.2 Scenario 2: Expander w/o Ethernet board

When there is no Ethernet Board on top of the Primary Expander module users need to connect serial console to Primary or Secondary Expander for managing them separately.

- “bpP >” or “bpS >” prompts in Console Terminal means the system is without Ethernet board installed and no network access support.
- “bpP >” prompts meaning serial console is connecting with Primary Expander.
- “bpS >” prompts meaning serial console is connecting with Secondary Expander.
- “?” or “help” command to display the commands help detailing how to use the console commands. For Example, “rev” to display firmware version, “sys” to display system status, “reset” to reset Expander watch dog.

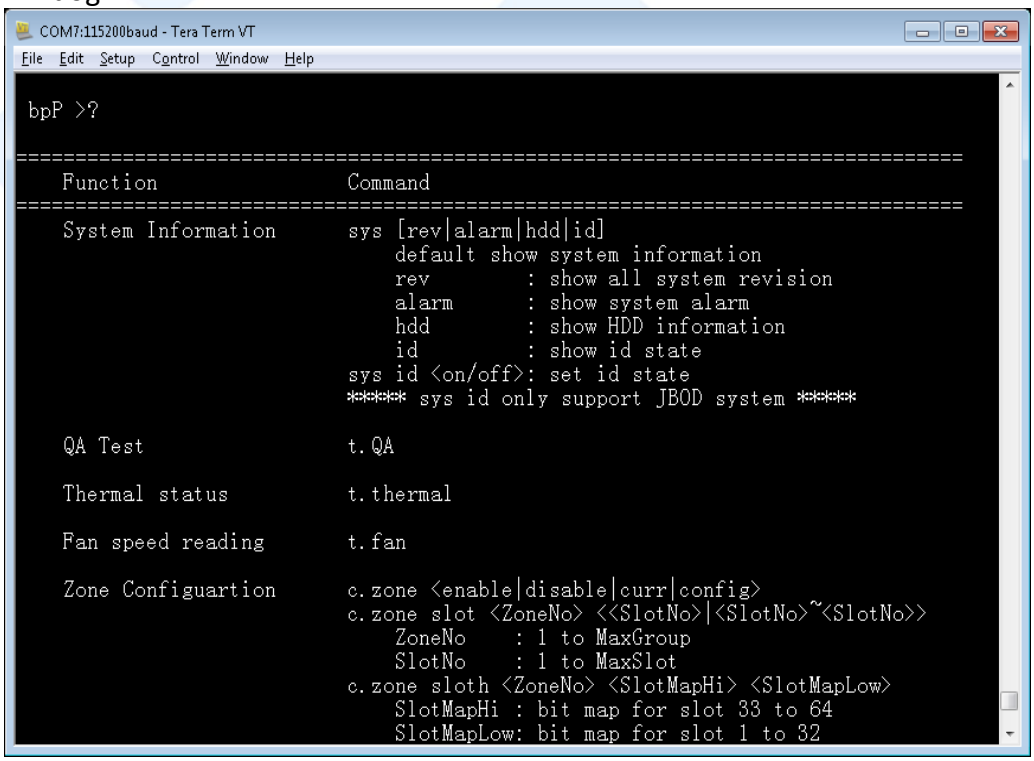

- “? <command>” to display usage of the specific CLI command.

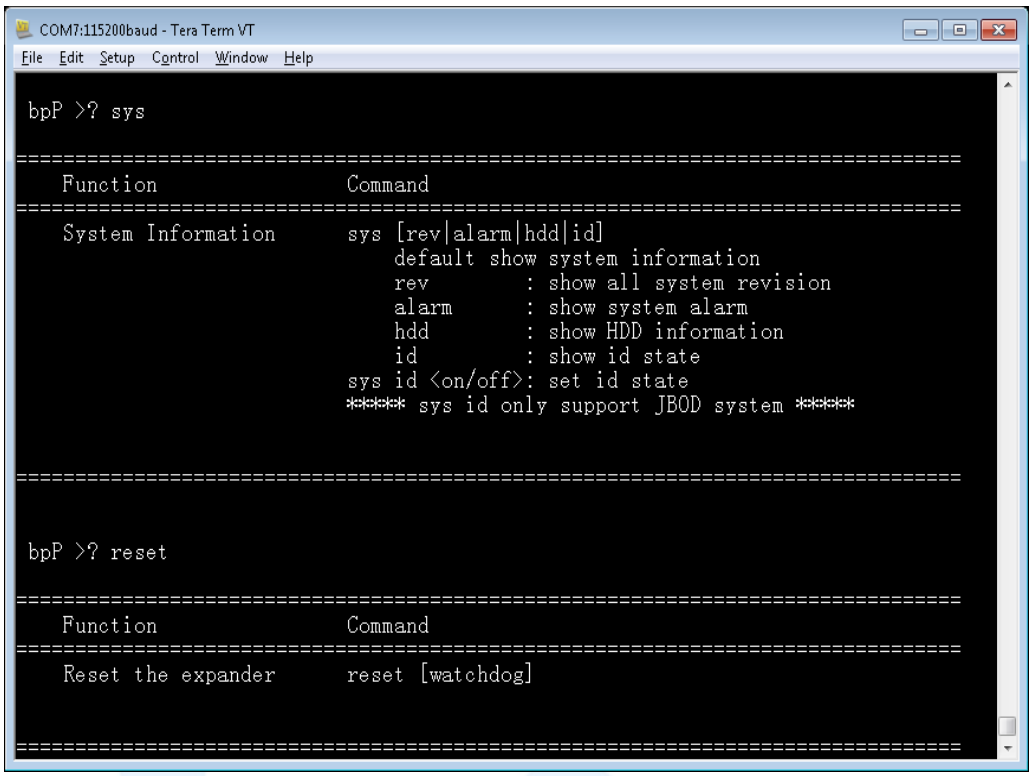

- Please note that the JBOD systems share the same Expander CLI commands no matter it is with or without Ethernet Management board inside unless otherwise specified.

5.3.3 Network Management

An Ethernet Board is required to support Network management. The Ethernet board sits on top of the Primary Expander module to provide Network Management in various protocols such as Telnet, SSH, Web-GUI, SNMP. It also provides email message sending while there is an alarm occurring by properly configuring the SMTP information.

While there is an Ethernet Board on top of the Primary Expander module it provides a flexible way to manage both Expanders through any physical RS-232 port on either Primary Expander or Secondary Expander by changing directory to /primary or /secondary.

The default setting of the Ethernet board is as below.

IP Address : 192.168.100.1
Subnet mask : 255.255.255.0
Gateway : 192.168.100.254
Username : admin
Password : default

* Please be sure the management host is in the same IP network domain as the system.
* Users can make changes of the settings to meet the network environment.
* For security purposes, we strongly recommend users to change the password immediately after the system is setup online.

5.3.3.1 Telnet

As an Ethernet Management board exists, rich set of network protocols are leveraged for flexible remote management. The supported protocols are Telnet, SSH, Web-GUI, SNMP and SMTP.

- Telnet is default enabled in Ethernet service. It provides the same level of CLI commands as it is through RS-232 console port.
- The difference from serial console is it requires Credential - Username and Password to gain access to Telnet session.

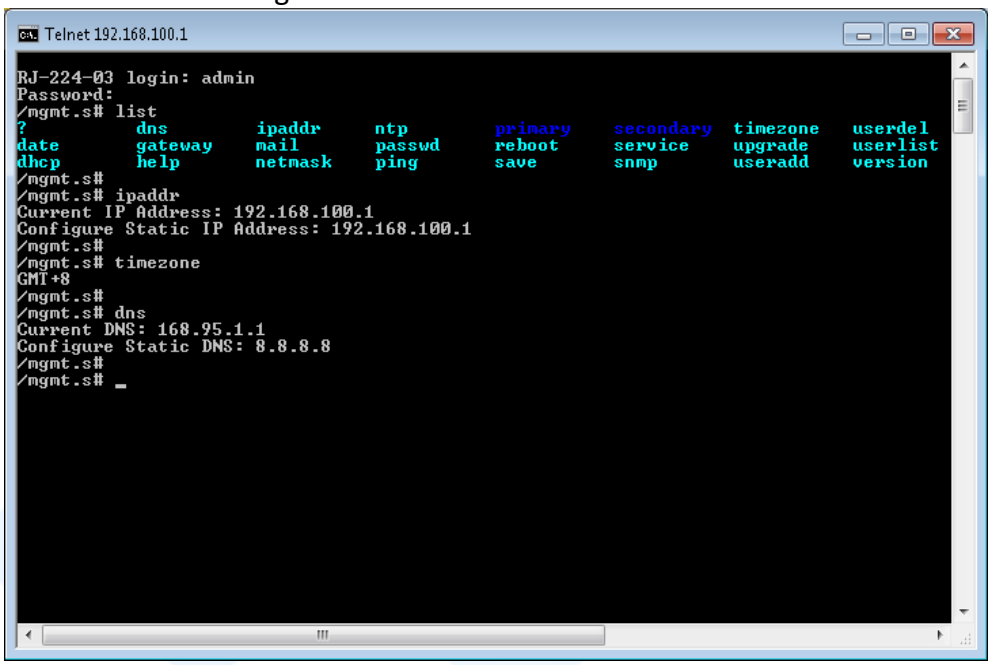

5.3.3.2 SSH

- SSH is default enabled in Ethernet service. It provides the same level of CLI command as it is through serial console or Telnet session.
- SSH provide a secure connection between host and JBOD system. It is default enabled on most Linux OSes. There are some freeware SSH tools for Windows to use such as Putty, Tera Term, …etc.
- Below is the Tera Term example to establish SSH session.

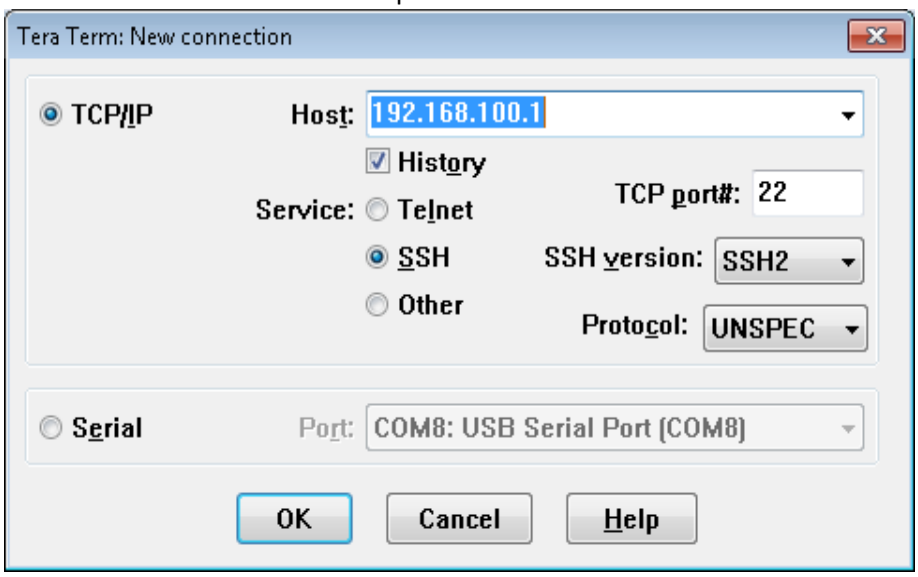

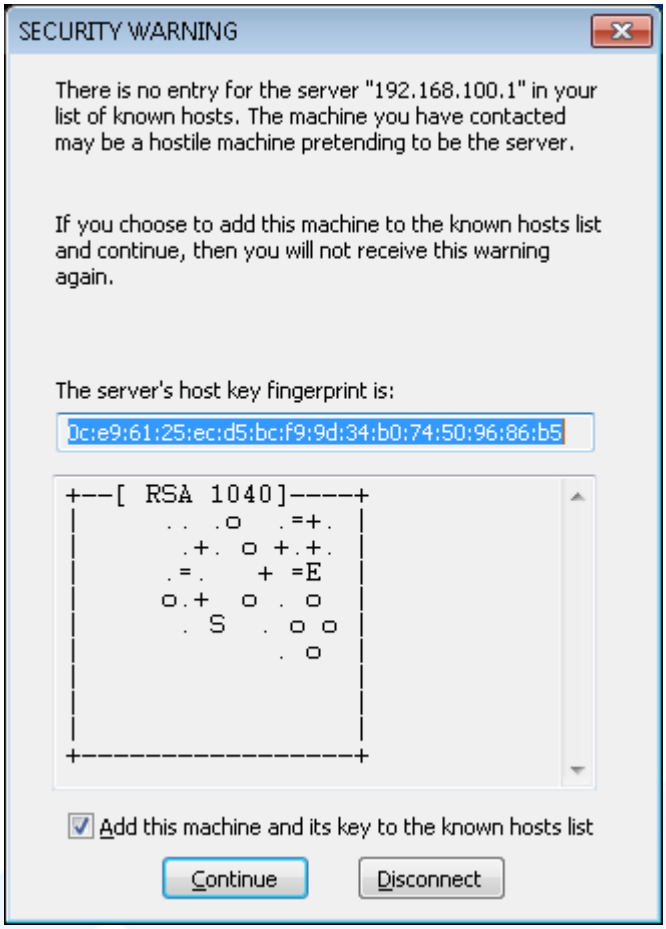
SECURITY WARNING
There is no entry for the server "192.168.100.1" in your list of known hosts. The machine you have contacted may be a hostile machine pretending to be the server.
If you choose to add this machine to the known hosts list and continue, then you will not receive this warning again.
The server's host key fingerprint is:
0c:e9:61:25:ec:d5:bc:f9:9d:34:b0:74:50:96:86:b5
+--[RSA 1040]----+
Add this machine and its key to the known hosts list
Continue
Disconnect

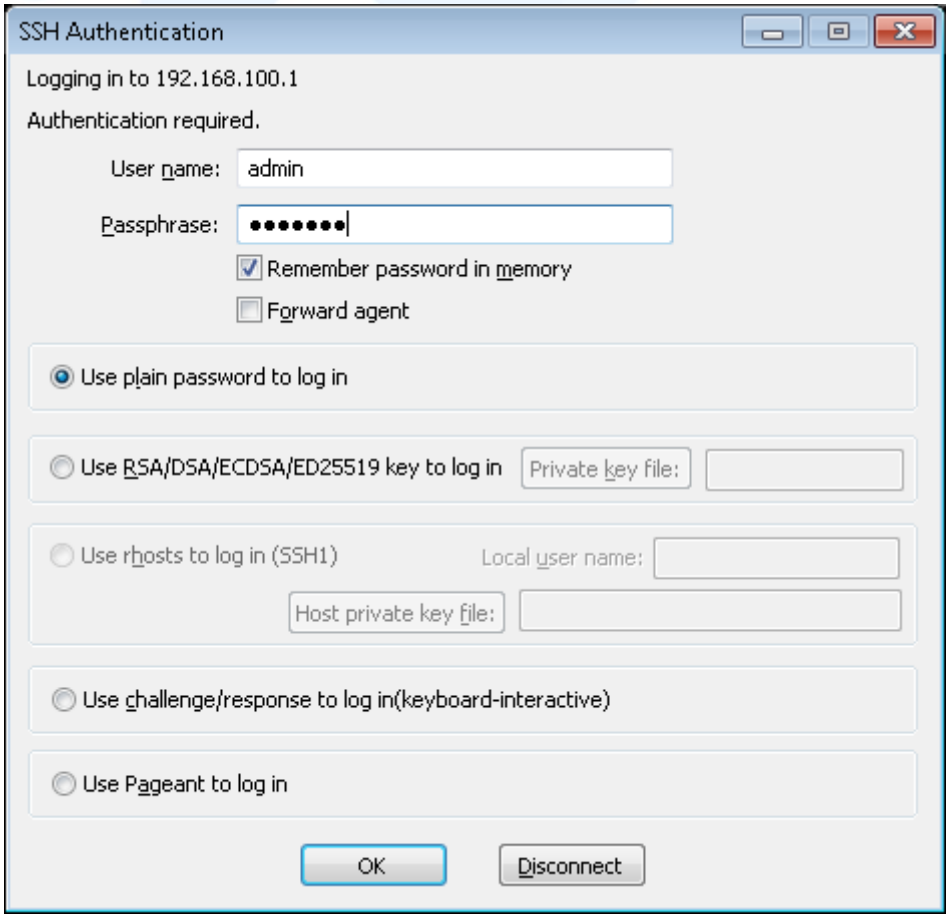
SSH Authentication
Logging in to 192.168.100.1
Authentication required.
User name:
admin
Passphrase:
Remember password in memory
Forward agent
Use plain password to log in
Use RSA/DSA/ECDSA/ED25519 key to log in
Private key file:
Use rhosts to log in (SSH1)
Local user name:
Host private key file:
Use challenge/response to log in(keyboard-interactive)
Use Pageant to log in
OK
Disconnect

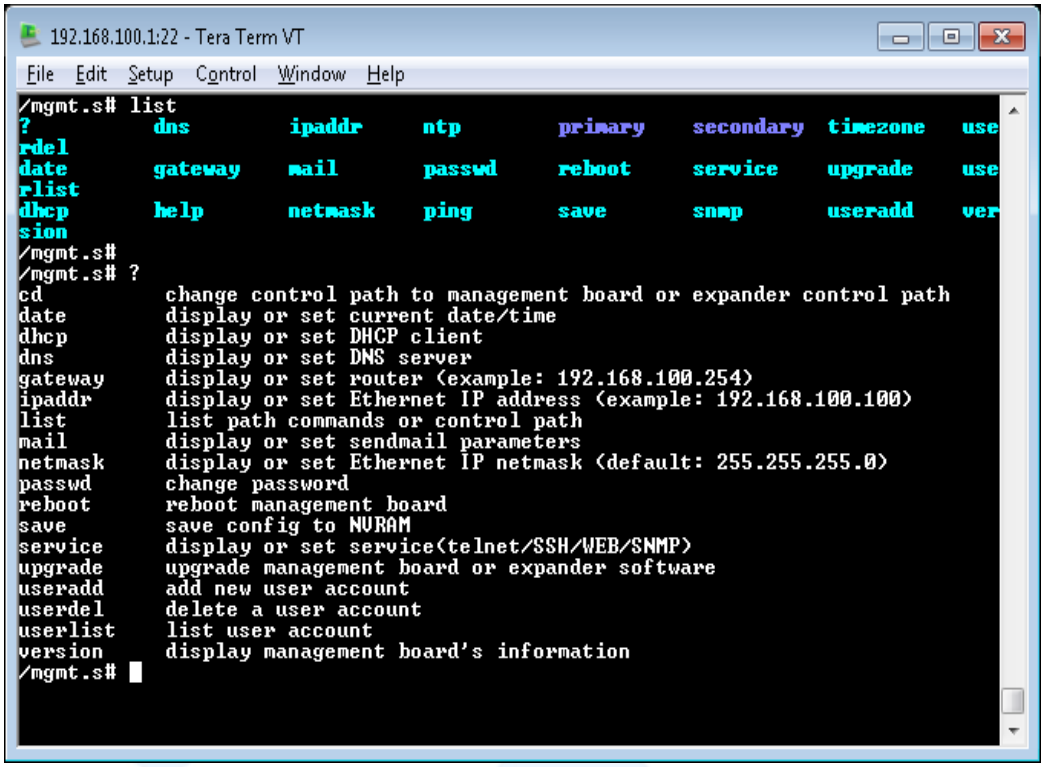

5.3.3.3 Web UI

- Web-GUI is the easiest way to manage JBOD system. It is default enabled on system.
- Users can simply open Web Browser and giving the JBOD management IP address in URL address field to start accessing system.

Login Page

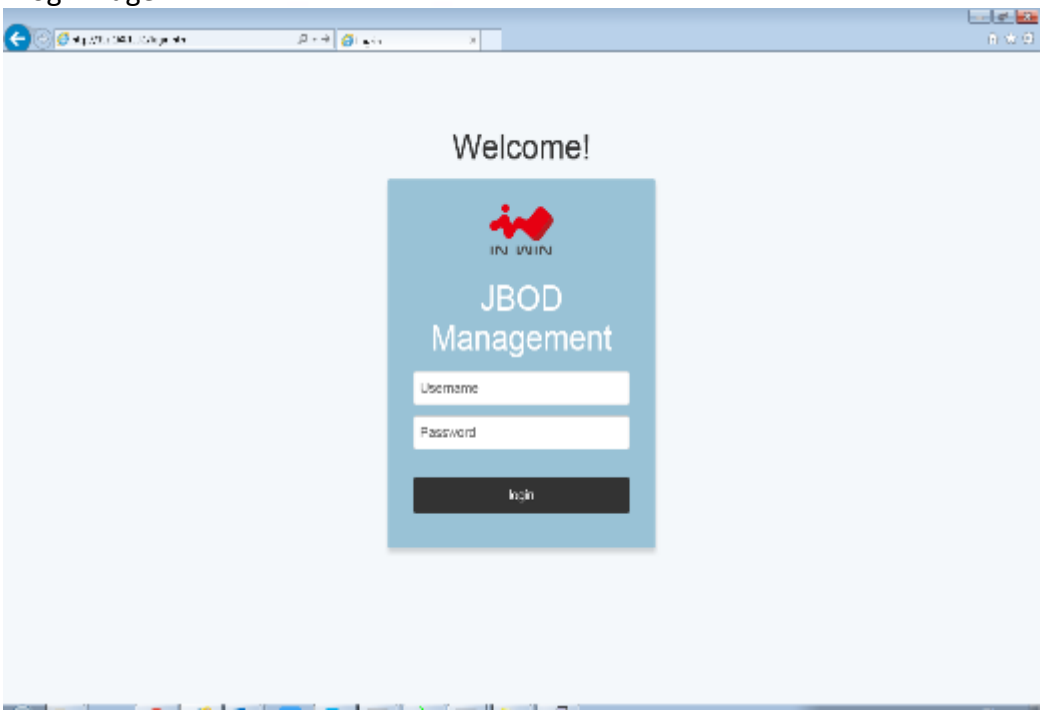

Version Page

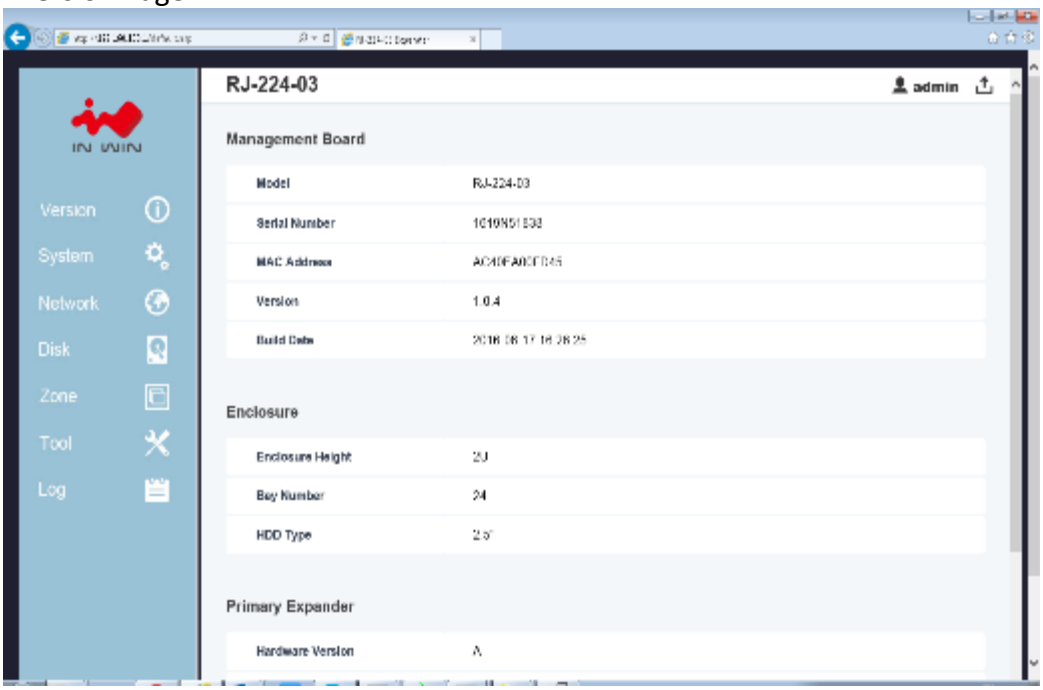

System Page

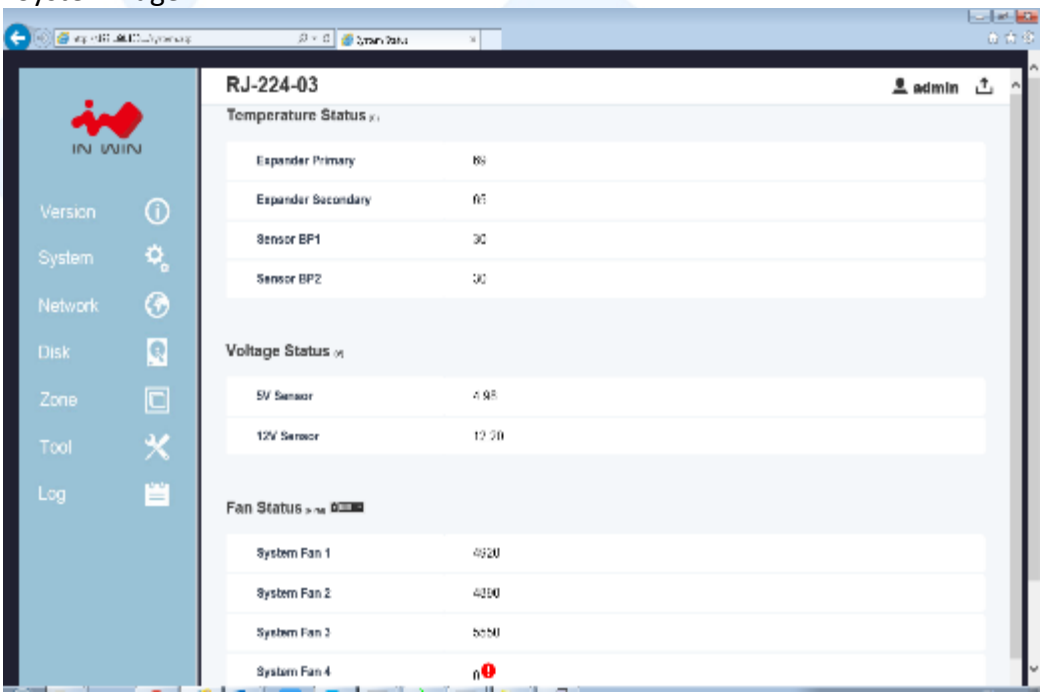

5.3.3.4 SNMP

- NMP is a popular network device management protocol that is widely used by IT people to manage systems, devices and equipment which are with SNMP support.
- IN WIN JBOD system has SNMP agent inside the network management board supporting SNMP v1 and v2c.
- Users need to configure the same read and write community string in JBOD system as the SNMP manager so the system can be managed by the SNMP Manager.

- An IN-WIN proprietary MIB which define system information is required to compile to SNMP Manager so the OID is able to be accessed properly.

inwin-jbod.mib

- SNMP Setting on System
  Users can change the setting through CLI and Web-GUI as necessary.

Check via CLI

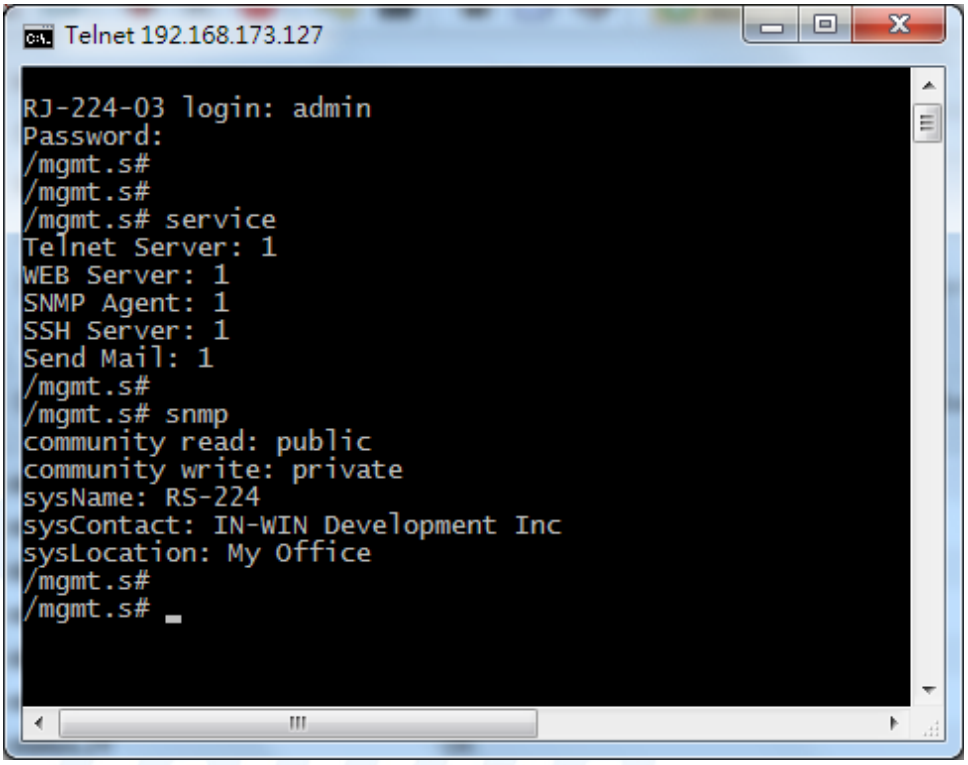

Check via Web

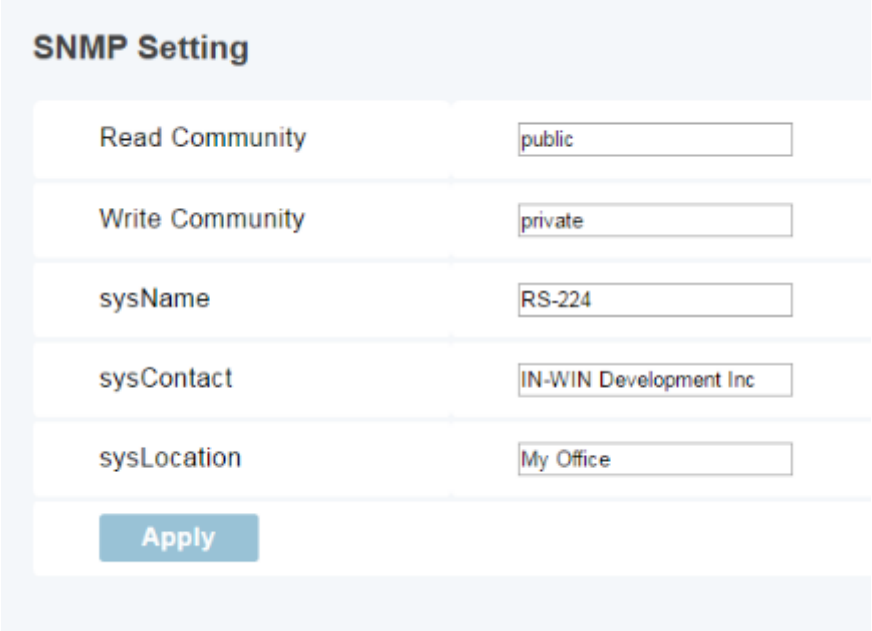

SNMP Manager

Any SNMP Managers can be used to access system information by properly configuring system setting including IP address, Read community string, Write community string to match the setting on system. And compile IN WIN JBOD MIB file to the manager is necessary. Below an example to browse the system MIB with a free tool.

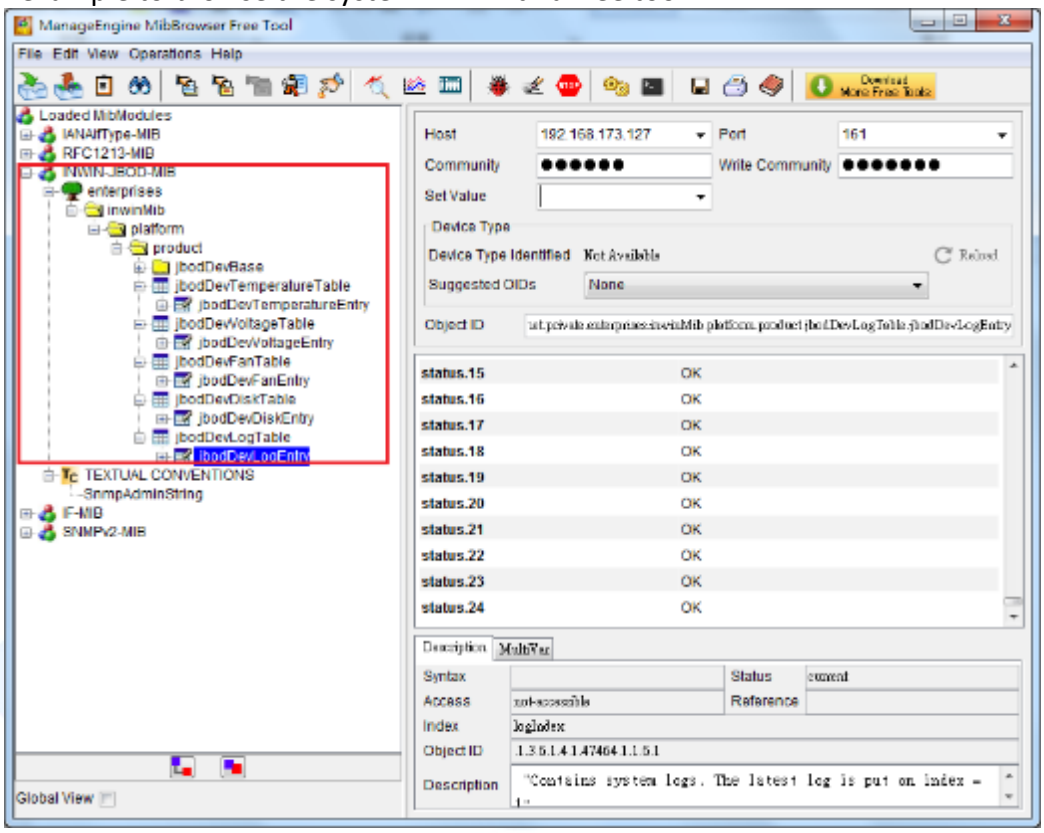

5.3.4 Version Information

Users can check the system hardware and firmware version through various ways.

5.3.4.1 CLI (UART without Ethernet Board)

- “sys rev” display compact Expander hardware, firmware and MFG version.
- “rev” display verbose system version information.

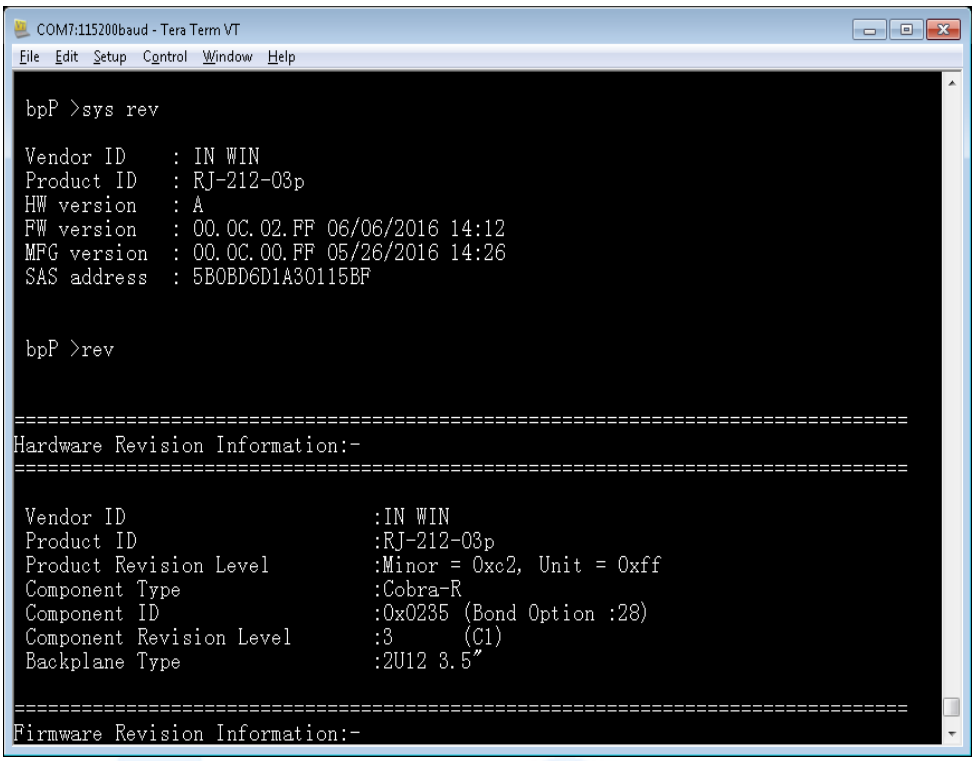

5.3.4.2 CLI (UART, Telnet and SSH with Ethernet Board)

- Type "version" command on Ethernet Layer to display all the version information including Ethernet firmware version, Expander HW version, Expander firmware version and MFG CFG file version.

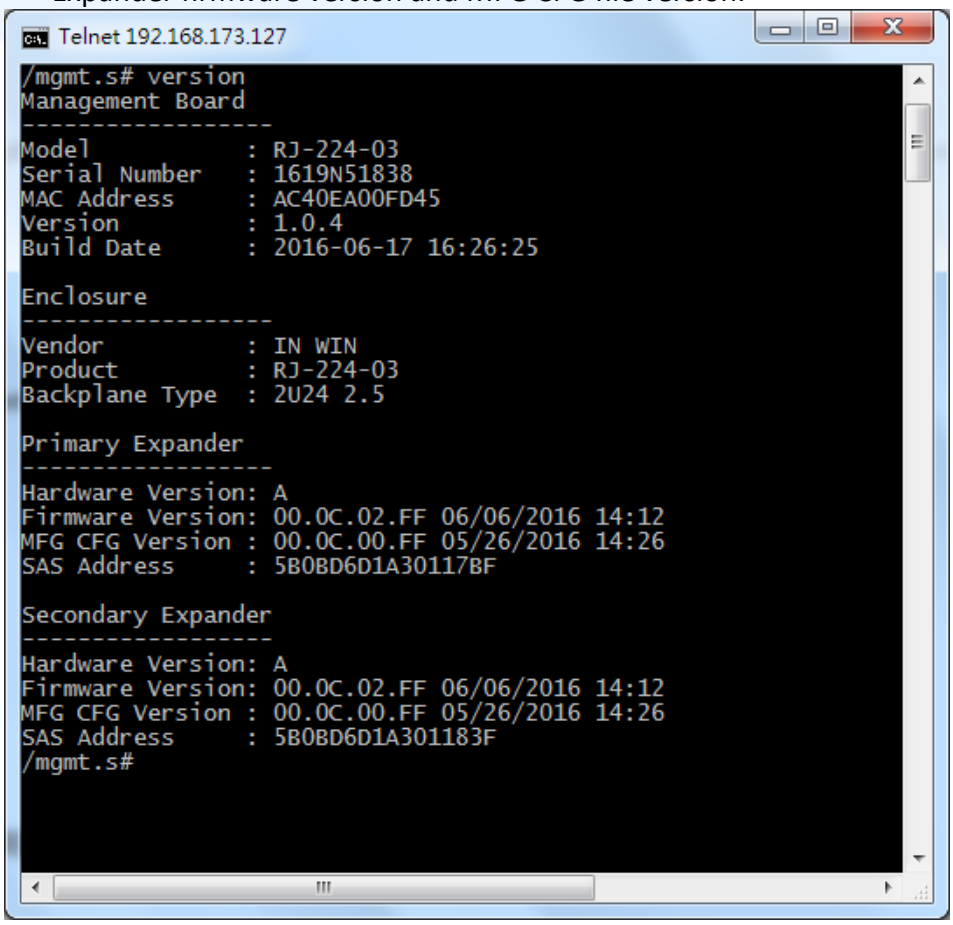

- To check SAS Expander versions only, users can change directory to Expander layer and type “sys rev” command to check Expander version information.

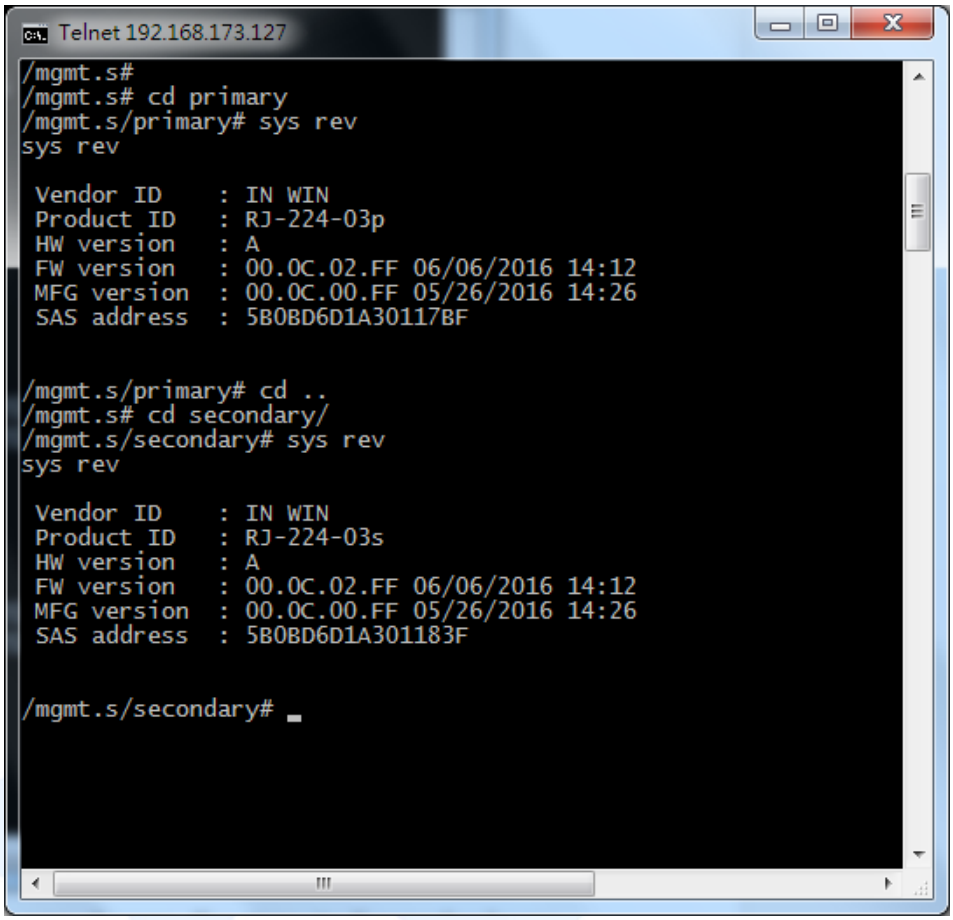

5.3.4.3 Web-GUI

- Type system IP address on Web Browser URL address field to gain access to the system. After logging in, click “Version” button on the left pane to view the system version information on the right pane. Scroll down to view all information if the display is out of page.

5.3.5 System Status

System Status is to display the status of the system sensors including temperature, voltage, fan speed and Power Supply.

There are 1 temperature sensor on each Expander, 2 system temperature sensors on Backplane, 5V and 12V voltage sensors on backplane, 4 Fan speed sensors on backplane and 2 Power Supply health sensors on PDB.

5.3.5.1 CLI (UART without Ethernet Board)

- Type “sys alarm” on console to check the system sensor’s readings and their status.
- Connect serial cable to Primary and Secondary Expander to check the status respectively. As the design, both Primary and Secondary Expanders would get the same reading and status (except Exp Die Temperature) since they are from the same sensors.

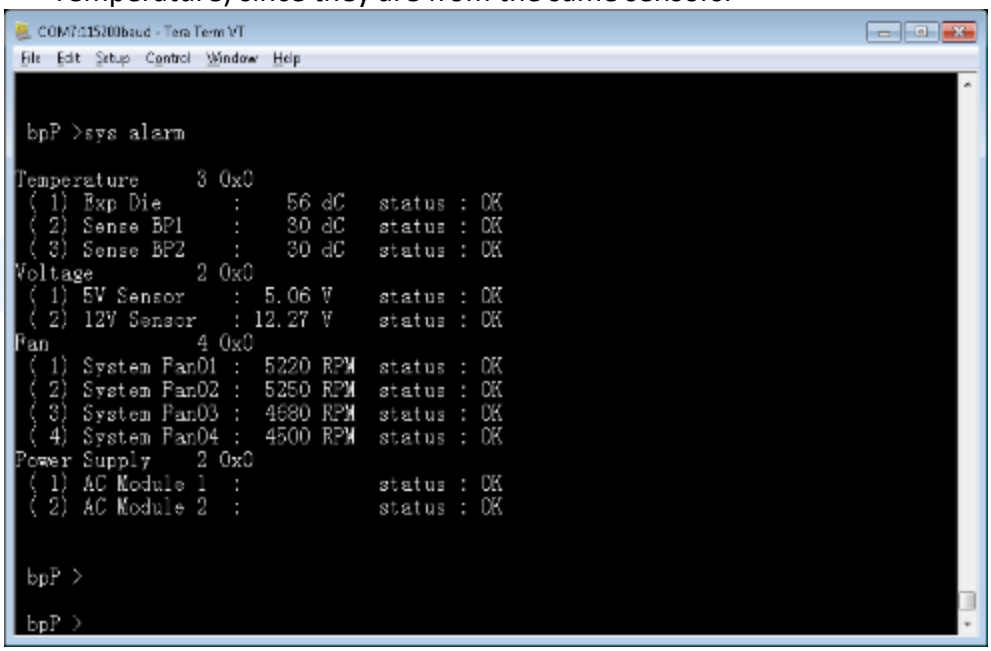

5.3.5.2 CLI (UART, Telnet and SSH with Ethernet Board)

- Type “sys alarm” command on Expander layer would display the System sensors’ reading and their status.
- Please note that the Expander temperature sensor “Exp Die” is located on the Expander chip so need to change directory to Primary and Secondary to read its status respectively.

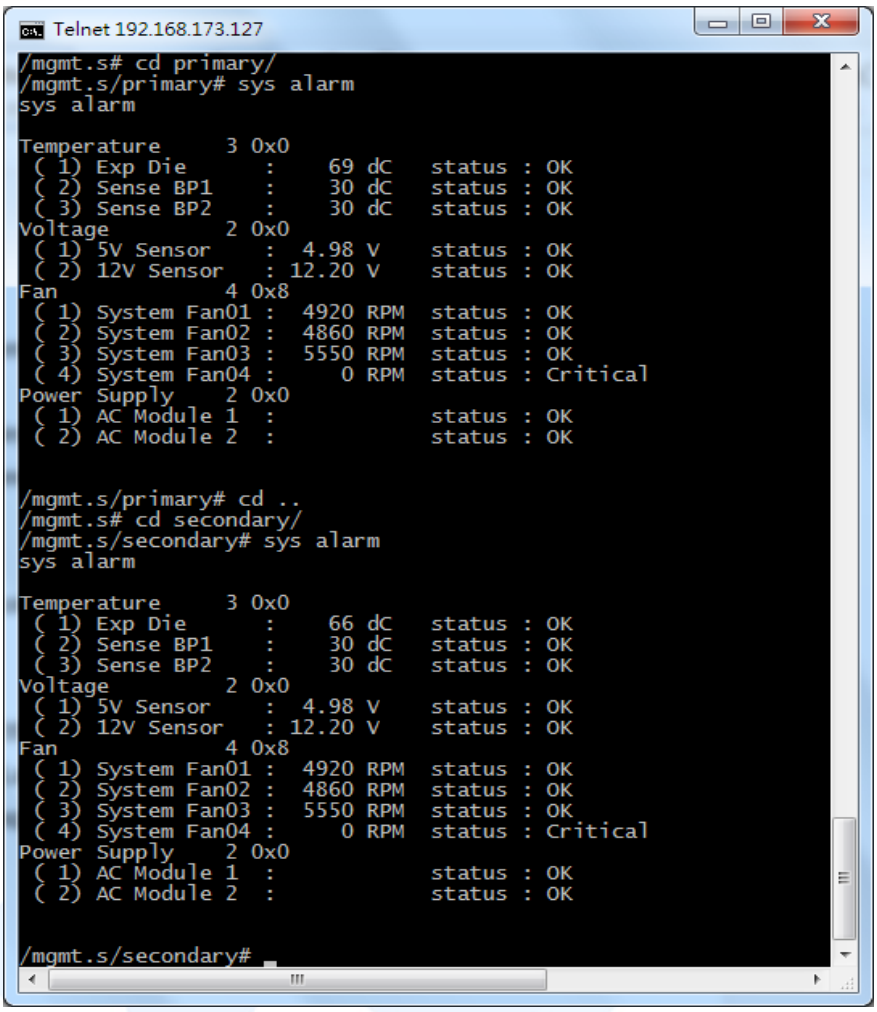

5.3.5.3 Web-GUI

- Type system IP address on Web Browser URL filed to gain access to the system. After logging in, click “System” button on the left pane to view the system status information on the right pane. Scroll down to view all information if the display is out of page.

5.3.6 Network Settings

Network settings is for displaying and setting the system network information including Current Network Status, DHCP/Static IP Address selection, Network Services, Mail configuration, SNMP configuration.

5.3.6.1 CLI (UART, Telnet and SSH with Ethernet Board)

- There are a couple network setting commands on Ethernet layer such as “ipaddr”, “gateway”, “netmask”, …etc. to view and configure the setting respectively. Please refer to Management\CLI session for more details in how to use the CLI commands.
- Please be sure to apply “save” command so the setting would be saved for next system reboot.

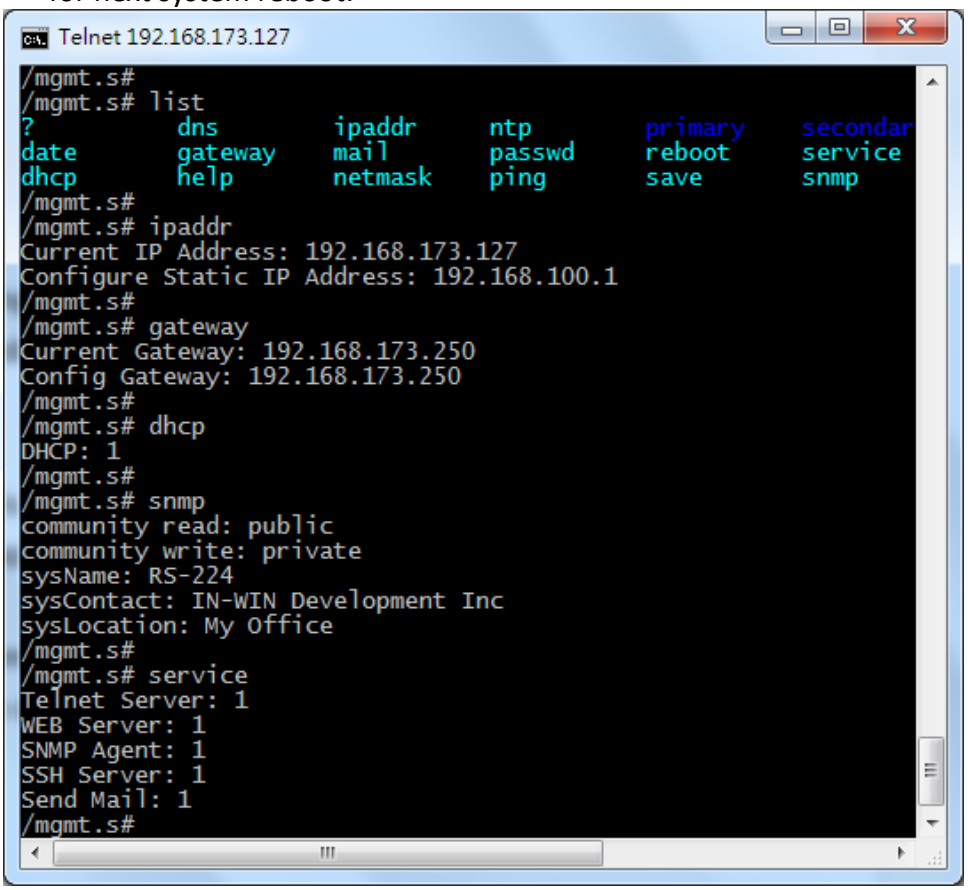

5.3.6.2 Web-GUI

- Type system IP address on Web Browser URL filed to gain access to the system. After logging in, click “Network” button on the left pane to view the network information on the right pane. Scroll down to view all information if the display is out of page.

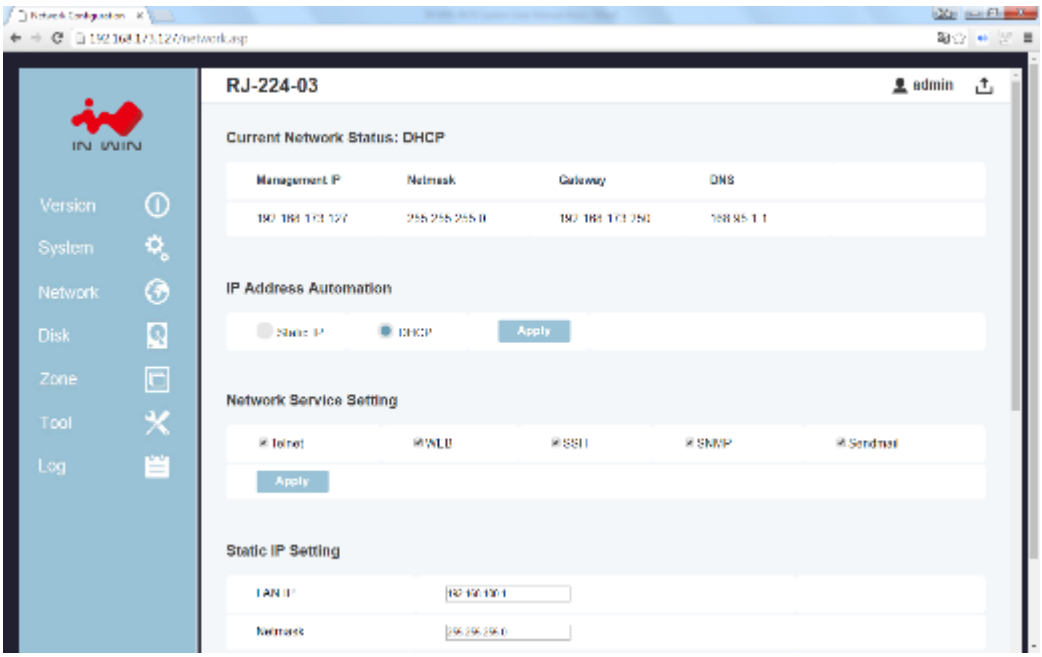

5.3.7 **Disk Information**

Disk information is to show the disk drives status on the system including Bay id, Phy id, SAS Address, Link speed and current status.

5.3.7.1 CLI (UART without Ethernet Board)

- Type “sys hdd” command to display the system hard disk drives status on the system.

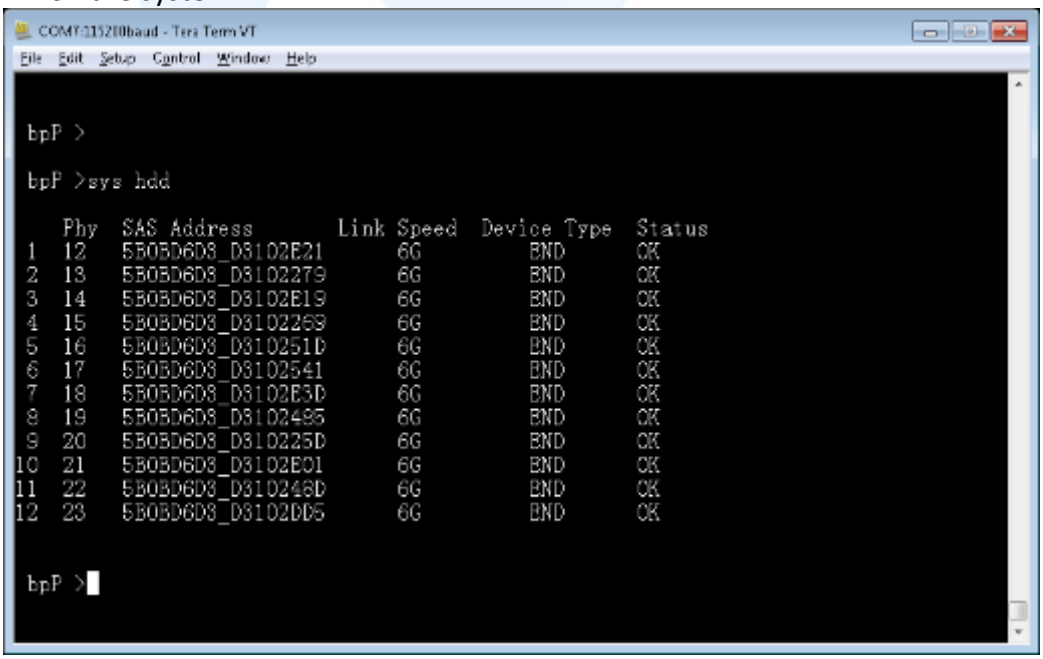

5.3.7.2 CLI (UART, Telnet and SSH with Ethernet Board)

- Type “sys hdd” command on Expander layer would display the system hard disk drives status on the system.

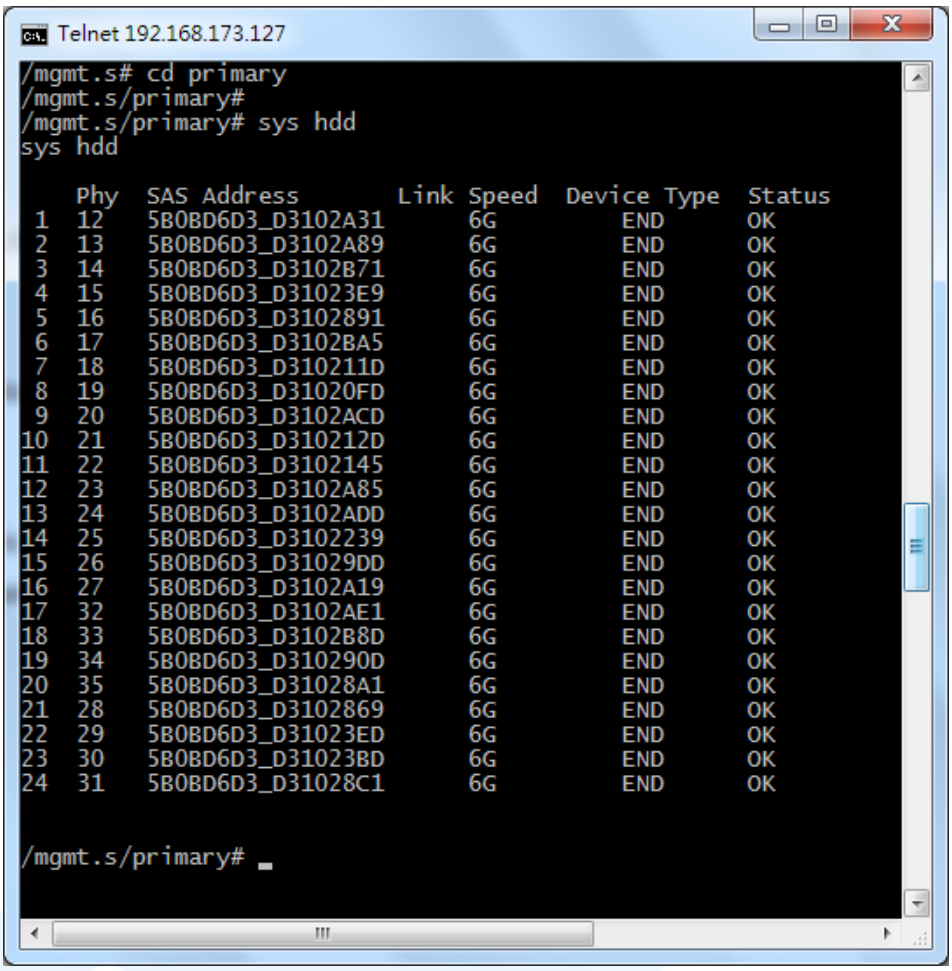

5.3.7.3 Web-GUI

- Type system IP address on Web Browser URL filed to gain access to the system. After logging in, click “Disk” button on the left pane to view the disk drives information on the right pane. Scroll down to view all information if the display is out of page.

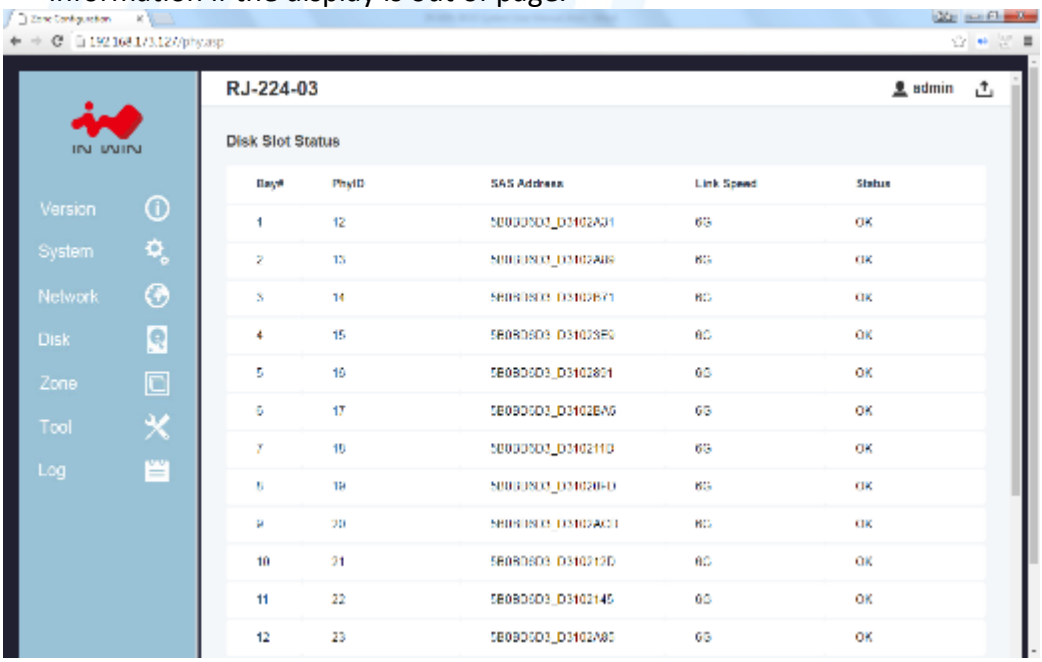

5.3.8 Zone Setting

5.3.8.1 CLI (UART without Ethernet Board)

5.3.8.1.1 Type “c.zone curr” command to show the current zone running setting.

5.3.8.1.2 Type “c.zone slot 1 1~6” to configure Zone 1 containing Slot 1 to Slot 6 disk drives.

5.3.8.1.3 Type “c.zone config” to show the zone configuration the users have made.

5.3.8.1.4 Type “c.zone down 1” to configure the Exp. Port of the 3 SAS ports belonging to zone group 1.

5.3.8.1.5 Type “c.zone enable” to enable Zoning setting of the system.

5.3.8.1.6 Type “c.zone disable” to disable Zoning setting of the system.

5.3.8.1.7 A system reboot is required to make the Zone configuration take effect.

5.3.8.1.8 Please note that the Zoning setting is only made for the expander the serial port is currently connected. To make both expander, please do it again on other Expander.

5.3.8.2 CLI(UART, Telnet and SSH with Ethernet Board)

5.3.8.2.1 Type “c.zone curr” command on Expander layer would display the current zone running setting.

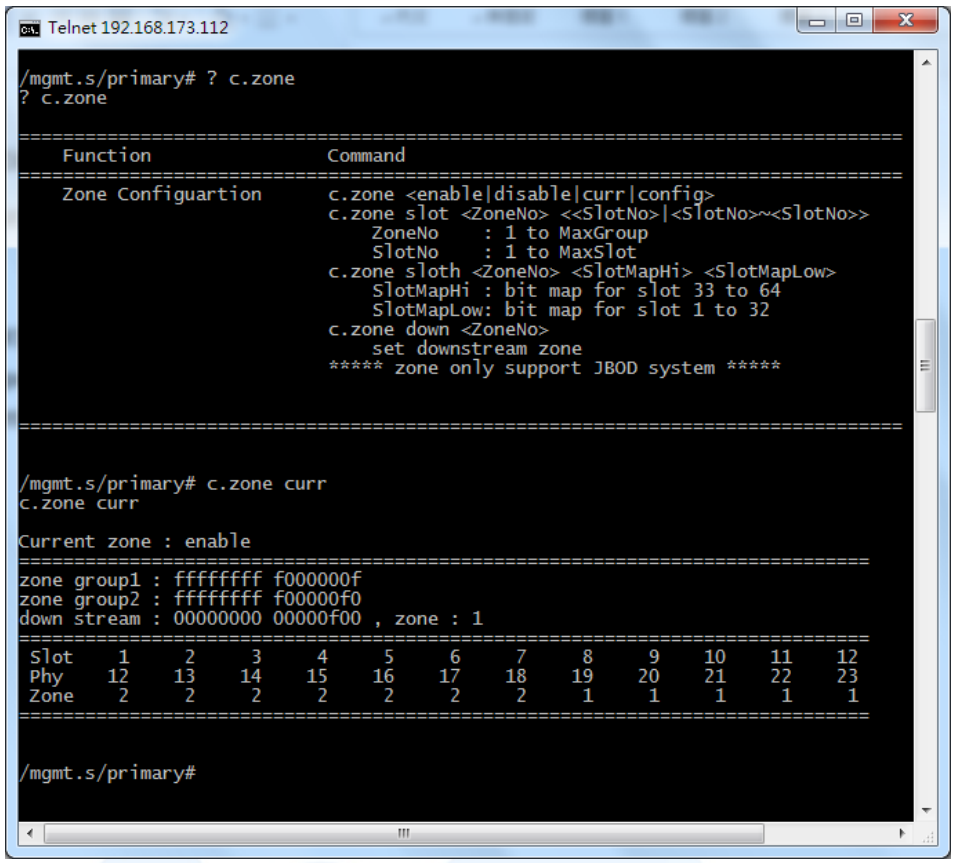

5.3.8.2.2 Type “c.zone slot 1 1~6” to configure Zone 1 containing Slot 1 to Slot 6 disk drives.

5.3.8.2.3 Type “c.zone config” to show the current zoning configuration. A system reboot is required to make the configuration take effect.

5.3.8.2.4 Type “c.zone down 1” to configure the Exp. Port of the 3 SAS ports belonging to zone group 1.

5.3.8.2.5 Type “c.zone enable” to enable Zoning setting of the system.

5.3.8.2.6 Type “c.zone disable” to disable Zoning setting of the system.

5.3.8.2.7 A system reboot is required to make the Zone configuration take effect.

5.3.8.2.8 Please note that the Zoning setting is only made for the expander the console is currently on. To make both expander, please do it again on other Expander.

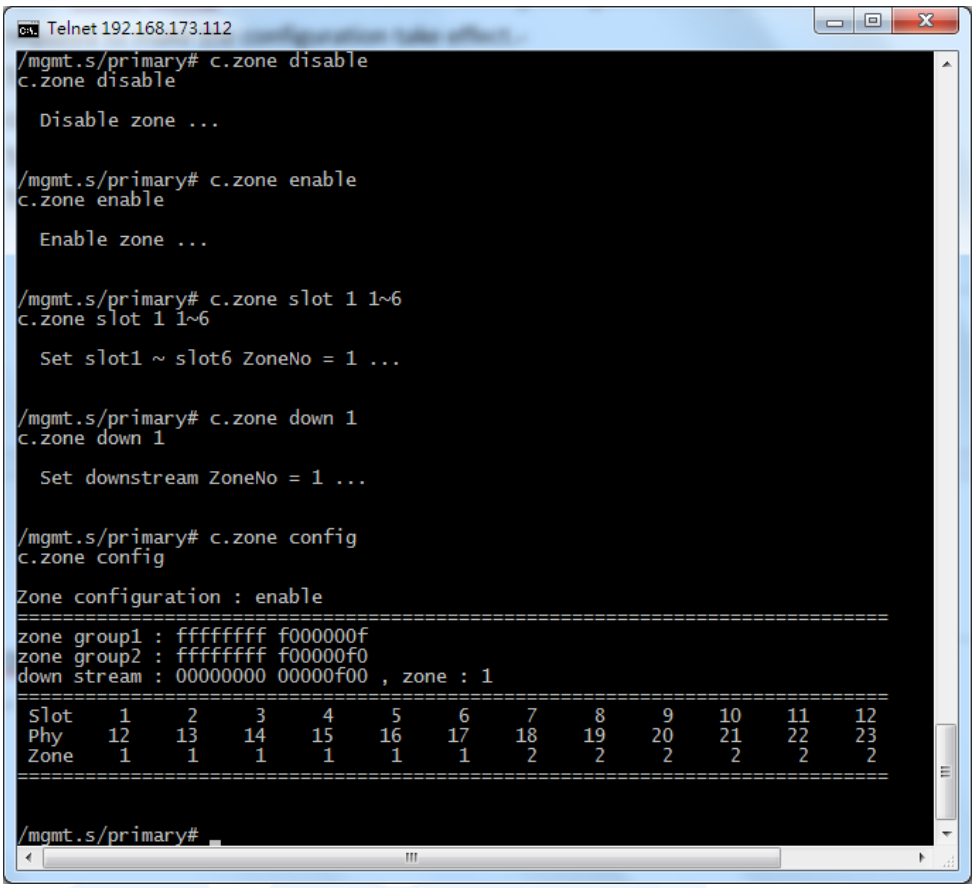

5.3.8.3 Web-GUI

5.3.8.3.1 Type system IP address on Web Browser URL filed to gain access to the system. After logging in, click “Zone” button on the left pane to view and configure the Zoning setting of the system.

5.3.8.3.2 “Current Zone Configuration” session shows the current zone setting on the system including the disk bay assignment of zone and the cascading port zone group.

5.3.8.3.3 “New Zone Configuration” session allow users to configure zone setting on the system in an easy way by selecting the disk bays and the zone group the cascading port belonging to. Click “Apply” to make the configuration take effect.

5.3.8.3.4 Whenever there are 2 SAS Expanders on the system, the Zoning setting applies to both while configuring through Web-GUI.

5.3.9 Firmware Upgrade

Firmware upgrade function provides a way to update system firmware when necessary.

There are 3 firmware for IN WIN JBOD system:

1. Ethernet Management Board Firmware (when there is Ethernet management board)
2. SAS Expander Board Firmware
3. SAS Expander MFG CFG binary

There are a couple ways to upgrade system firmware according to the HW configurations. Please note that the upgraded firmware won't take effect immediately until a system reboot.

5.3.9.1 CLI (UART without Ethernet Board)

When there is no Ethernet Management board on the system users can upgrade SAS Expander firmware and MFG CFG file through Xmodem protocol. Most of serial console terminal tools such as Tera Term support Xmodem protocol for sending file to system.

The Firmware upgrade has to be done on both the Primary and Secondary SAS Expander separately whenever there is a Secondary SAS Expander on the system.

5.3.9.1.1 SAS Expander Firmware

A. "fwdl" command on serial console.

B. Type "y" to commit firmware upgrade.

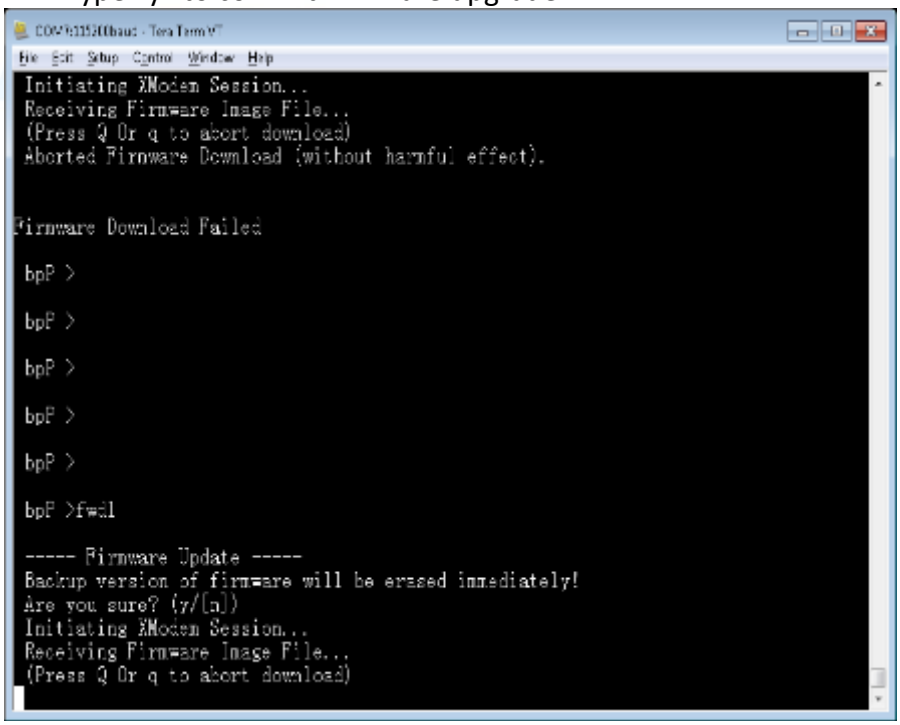

C. Select xmodem as the protocol to transfer file.

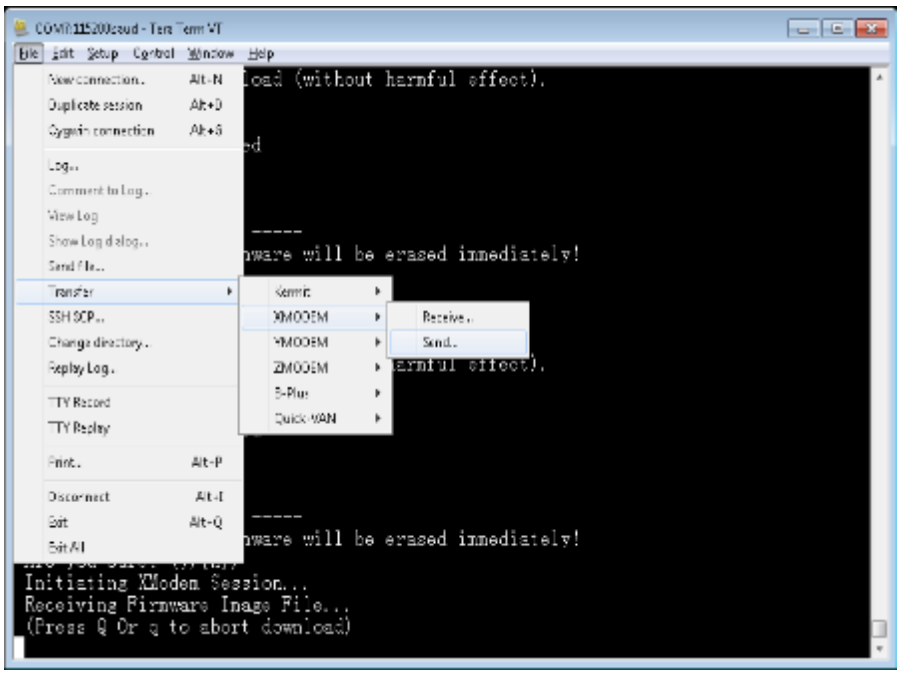

D. Select the correct SAS Expander firmware file.
E. Click on "Open" to start the selected firmware transferring to SAS Expander.

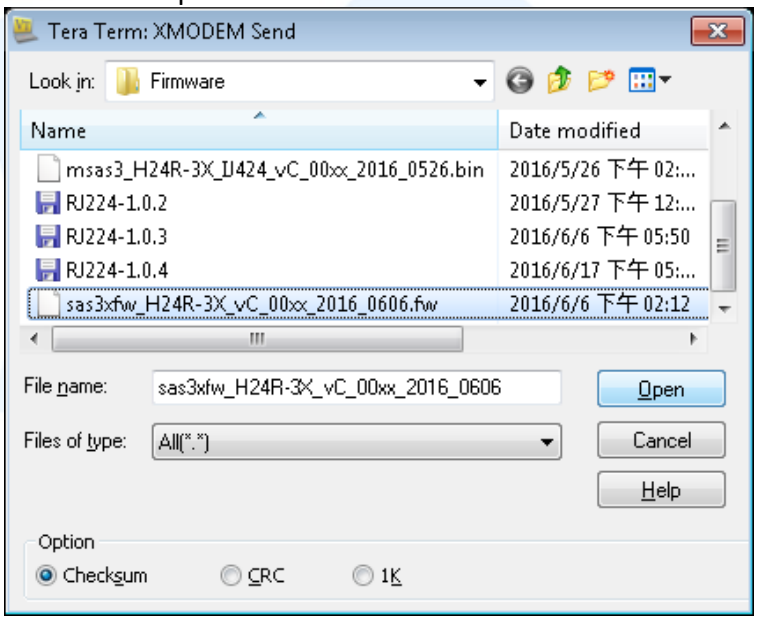

F. Serial console would then start firmware transfer.

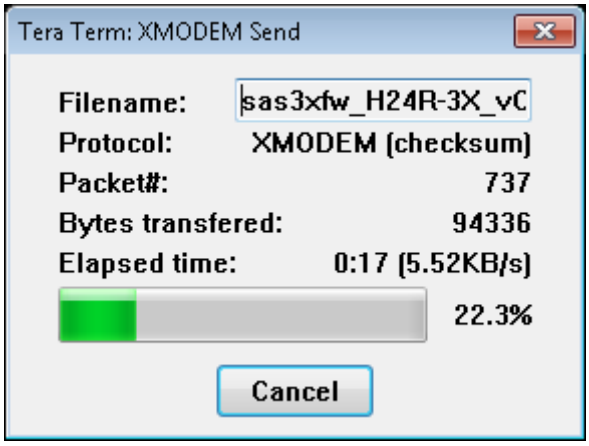

G. After firmware transfer completed, reboot Expander to activate new firmware.

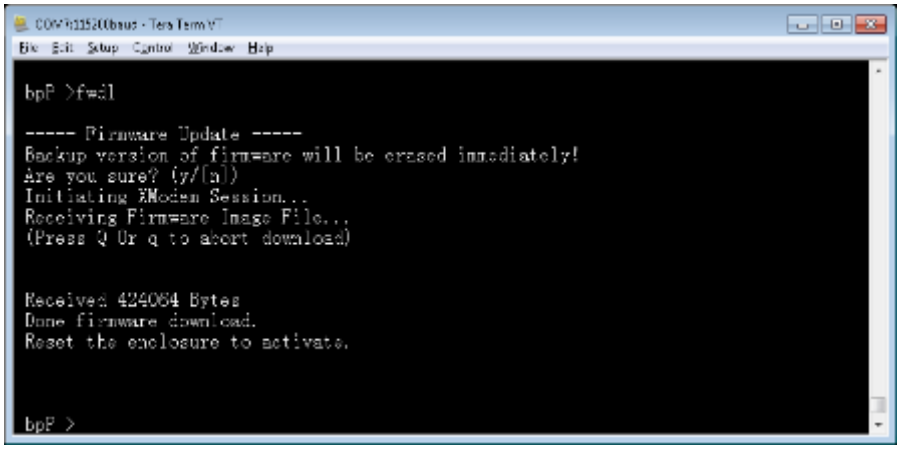

5.3.9.1.2 SAS Expander MFG CFG binary

A. Similar to firmware upgrade, typing “mfgdl” on console.

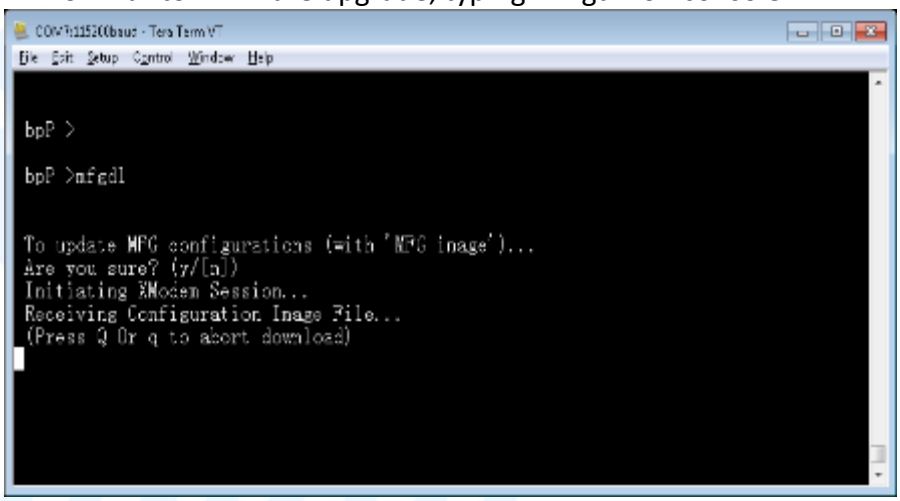

B. Type “y” to commit MFG file upgrade.
C. Select xmodem as the file transfer protocol.
D. Select the correct MFG CFG file from file browser.
E. Click “Open” to start file transfer.
F. Serial console would then start file transfer.

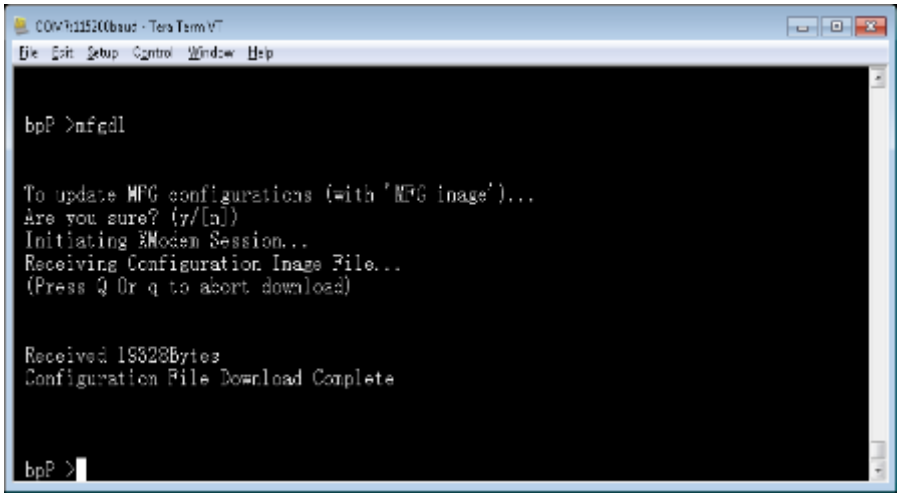

G. Reset Expander to activate MFG CFG file by applying “reset” command or power recycle the system.

5.3.9.2 CLI (Telnet or SSH with Ethernet board)

When there is an Ethernet Management board on the system users should upgrade Ethernet Board firmware, SAS Expander firmware and MFG CFG file through network instead of xmodem when using CLI commands.

All sort of firmware upgrade goes through TFTP and the system would intelligently upgrade firmware to the right hardware. More conveniently, both the Primary and Secondary SAS Expanders would be upgraded at the same time when upgrade command is applied.

Run a TFTP server on your computer and assign the “Current Directory” with the path to where the firmware is stored. Assign “Server interface” with the IP address in the same domain as JBOD system. (Please be sure to configure TFTP server accordingly if you are using different TFTP server from the one in the example).

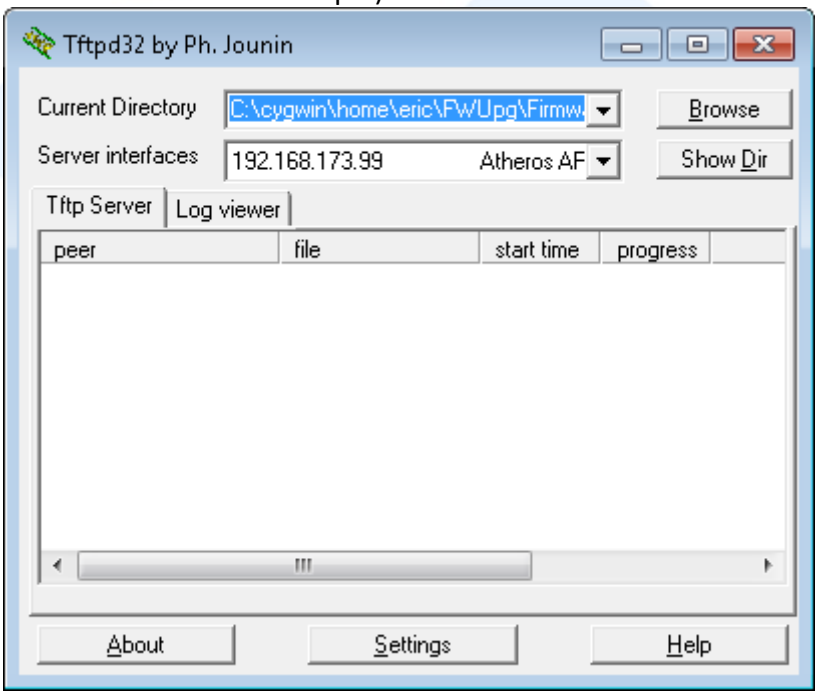

Do not turn off the system while the firmware is upgrading, it might crash the system.
New firmware does not take effect until a system reboot.

5.3.9.2.1 Ethernet Management Board Firmware

“upgrade <tftp_server_ip> <filename> command to start Ethernet Firmware upgrade.

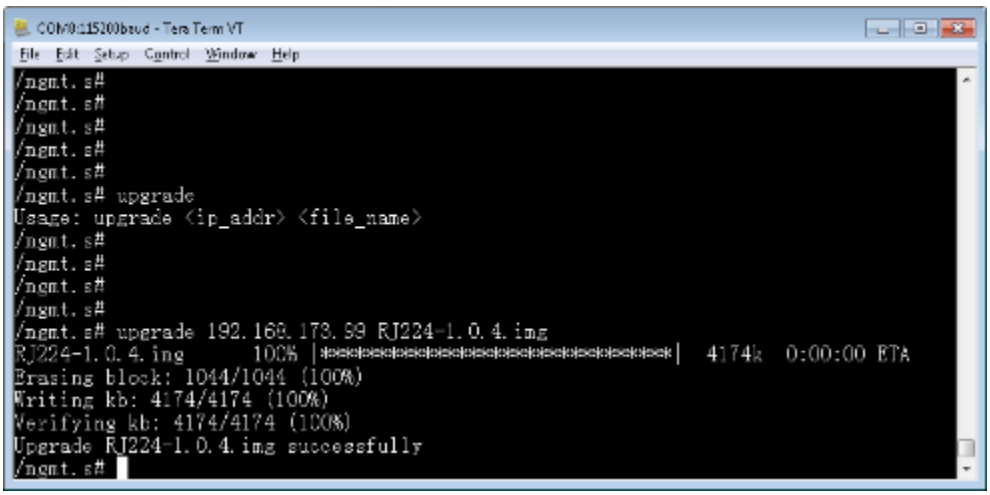

5.3.9.2.2 SAS Expander MFG CFG binary

Same as above by using the Expander MFG CFG binary filename in command.

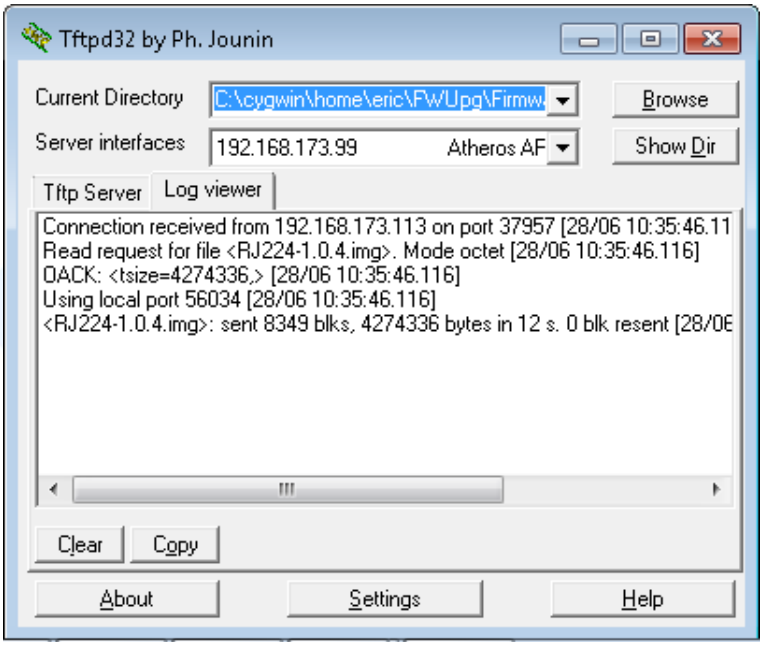

5.3.9.2.3 SAS Expander MFG CFG binary

Same as above by using the Expander MFG CFG binary filename in command.

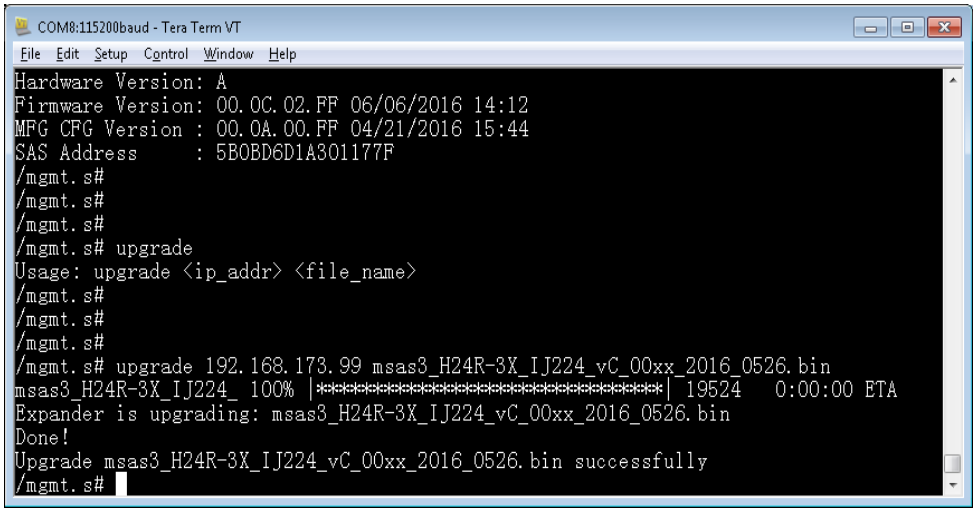

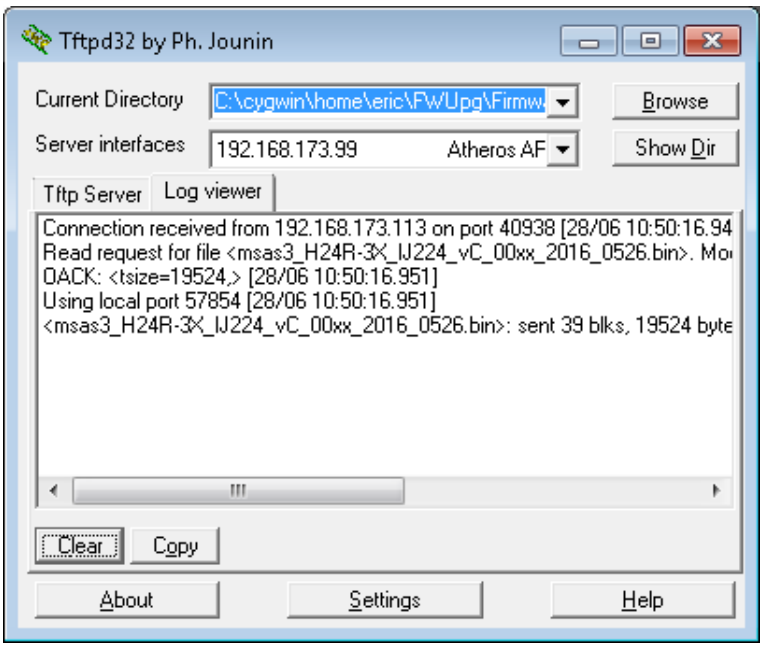

5.3.9.3 Web-GUI (with Ethernet board)

When there is an Ethernet Management board on the system users can upgrade system firmware through Web-GUI other than CLI in console or Telnet session.

Upgrade system firmware through Web-GUI is much easier than other ways. Just simply select the firmware by file browser and click 'Apply' to start.

All the firmware including Ethernet board firmware, SAS Expander firmware and MFG CFG file apply the same way to upgrade.

After system upgrade, be sure to reboot system to take effect the new firmware which has been upgraded to the hardware.

5.3.9.3.1 Open Web browser and give the URL filed with system IP address.

5.3.9.3.2 Given username and password on the Welcome page.

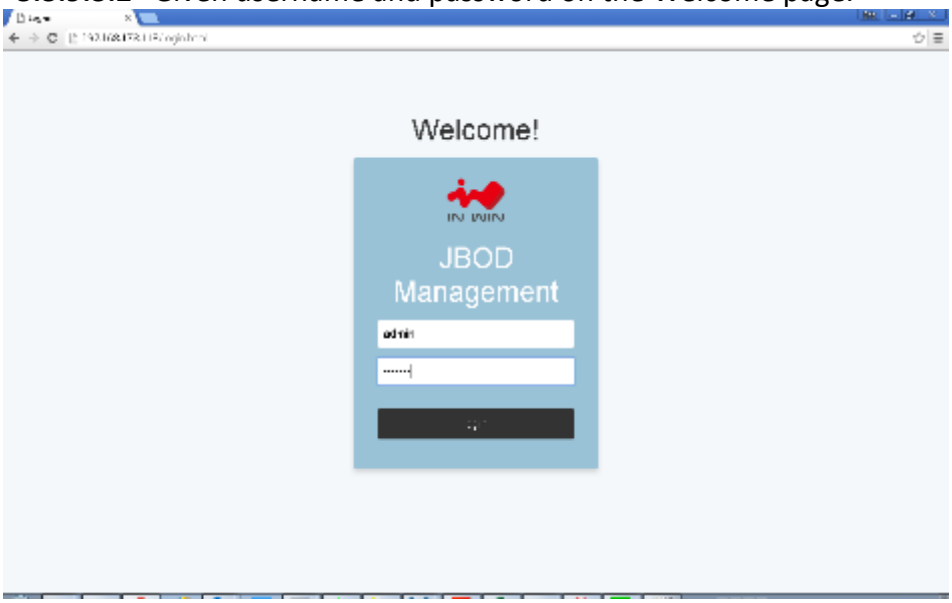

5.3.9.3.3 Click “Tool” button on the left pane and scroll down to “Software Upgrade” session on the right pane.

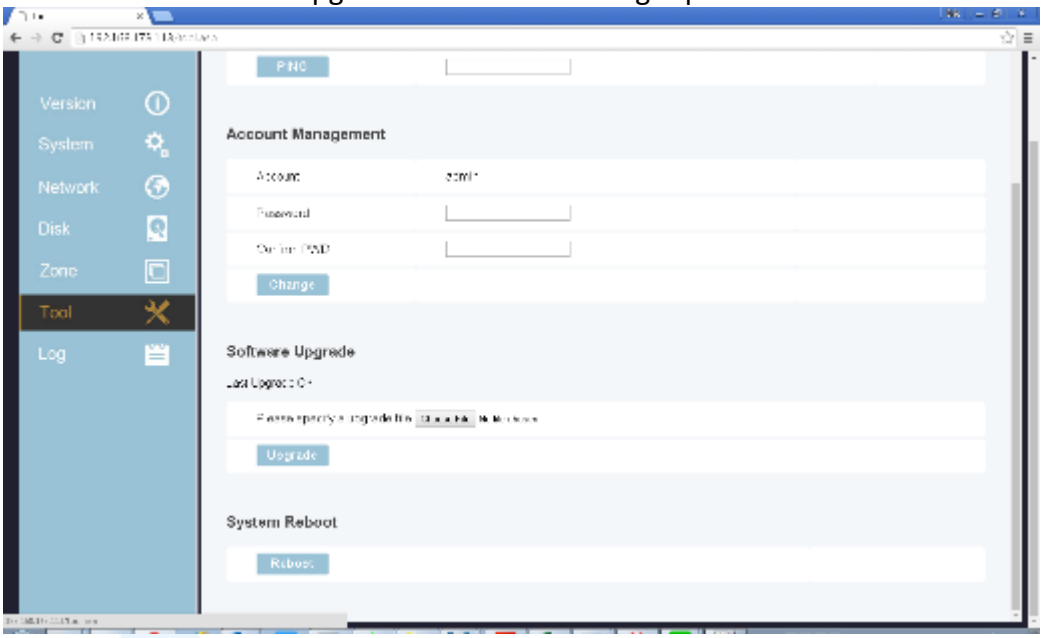

5.3.9.3.4 Click “Choose File” button to select the firmware being upgraded from file browser and click “Open” to commit.

The firmware can be an Ethernet board firmware, SAS Expander firmware or SAS Expander MFG CFG file. System intelligence would detect the firmware type and upgrade to the right hardware.

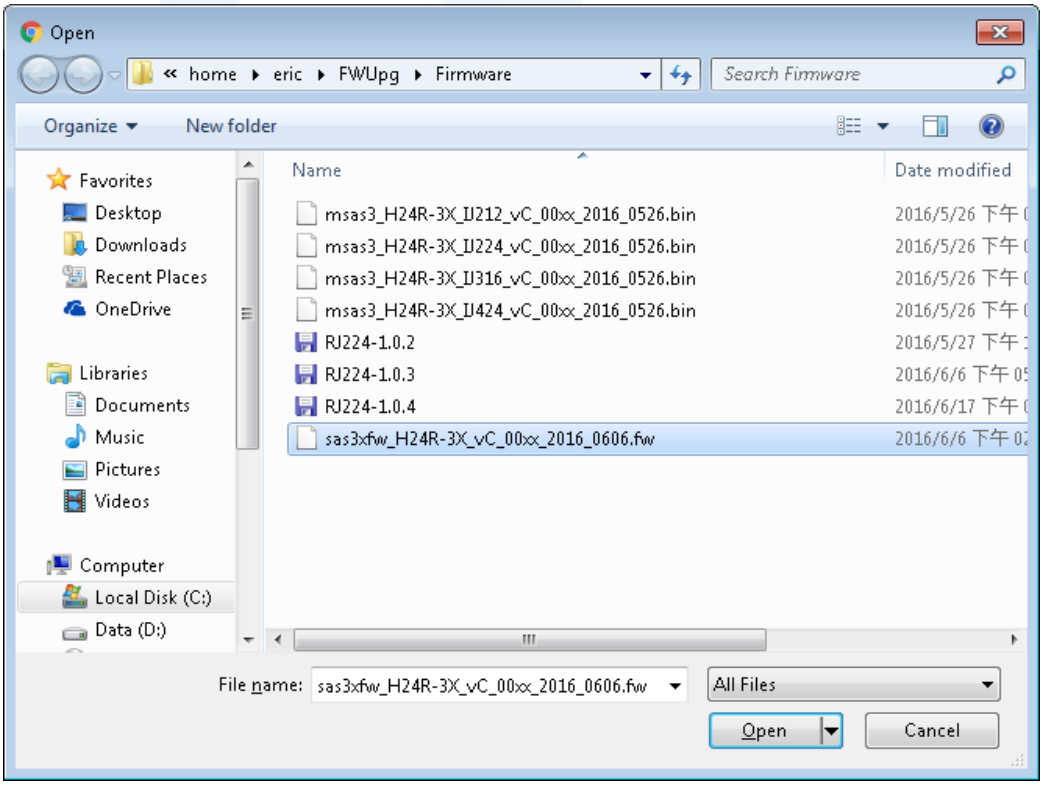

5.3.9.3.5 Click “Upgrade” button to start firmware upgrade.

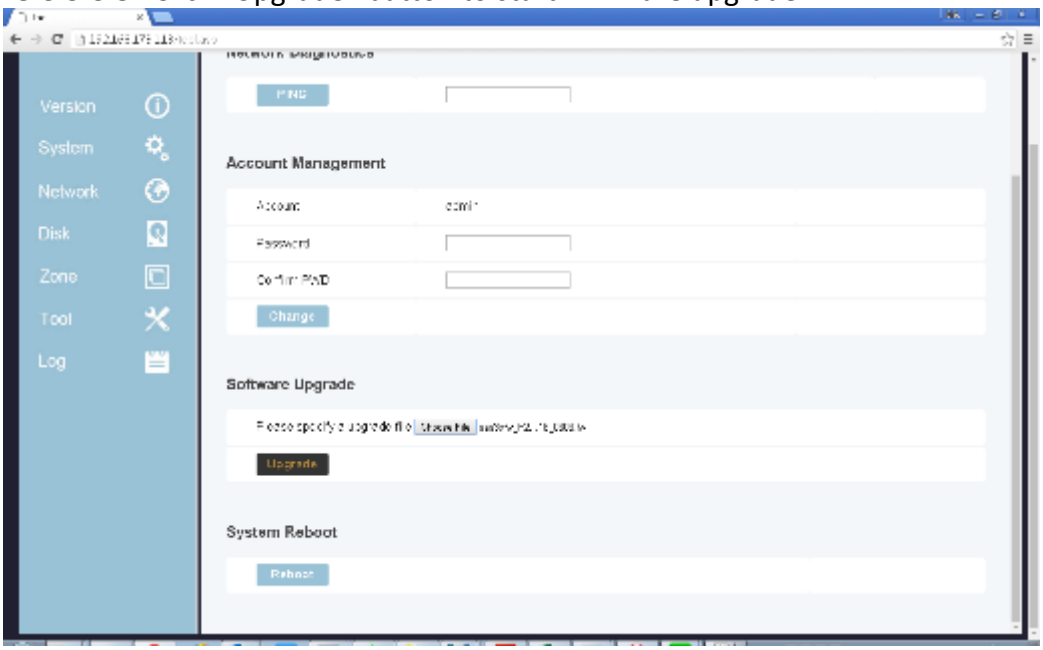

5.3.9.3.6 Web would direct to a page telling firmware is upgrading.
After upgrade is done, Web will direct to the Login page.

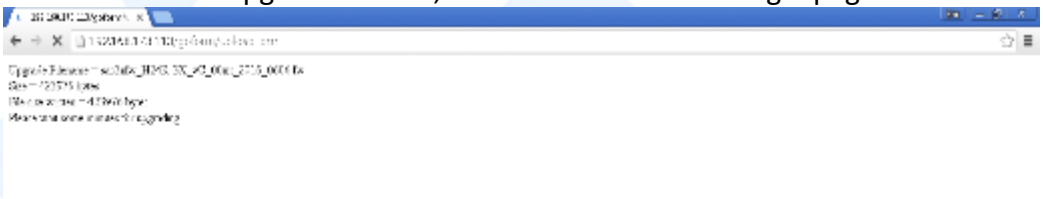

5.3.9.3.7 A system reboot is require to make new firmware take effect.

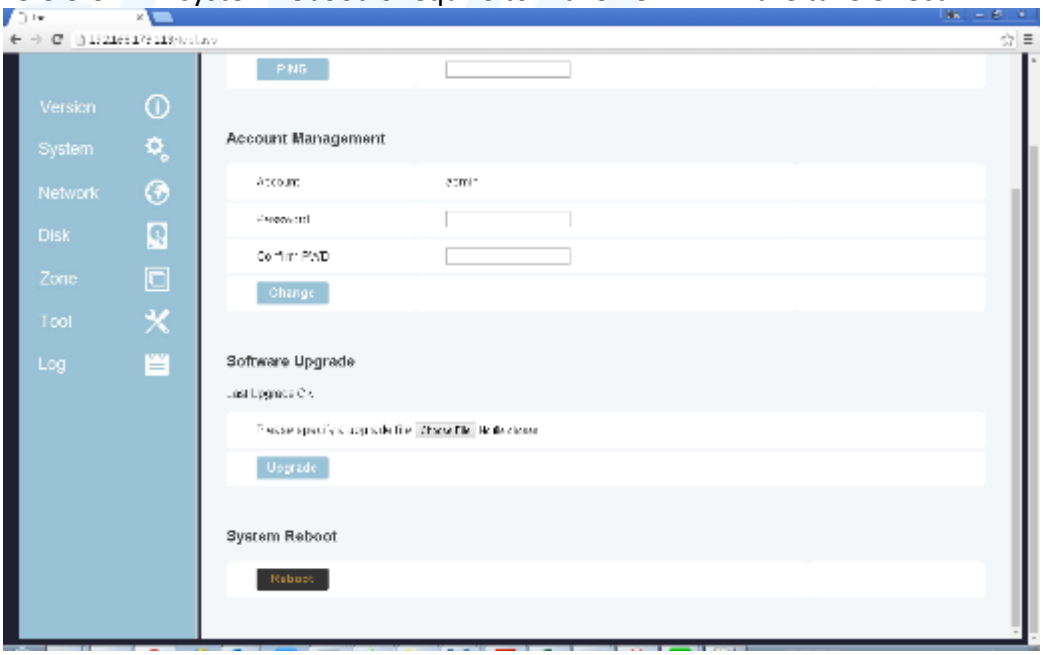

5.3.10 System Logs

IN WIN JBOD systems support the capability to record system information to NVRAM for the purpose of activities history monitoring. The recorded information will retain until users issue clear command to erase from NVRAM or the NVRAM is full. Two categories of system information - Info and Fail would be recorded when happens.

5.3.10.1 CLI (UART without Ethernet Board)

Users can check the system logs by connecting serial cable to Expander RS-232 port directly. Users will need to physically connect serial cable to Primary or Secondary SAS Expander to check the logs on it.

Users can check the system logs by connecting serial cable to Expander RS-232 port directly. Users will need to physically connect serial cable to Primary or Secondary SAS Expander to check the logs on it.

5.3.10.1.1 “nvlogs” command to display all logs

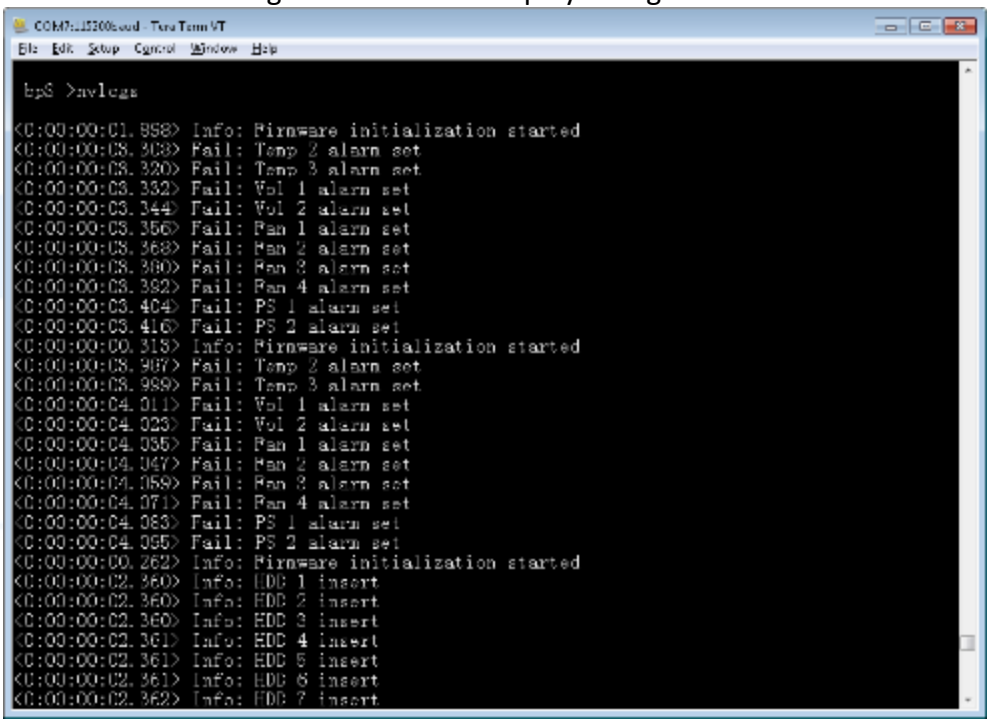

5.3.10.1.2 “nvlogs info” to display only the information category logs.

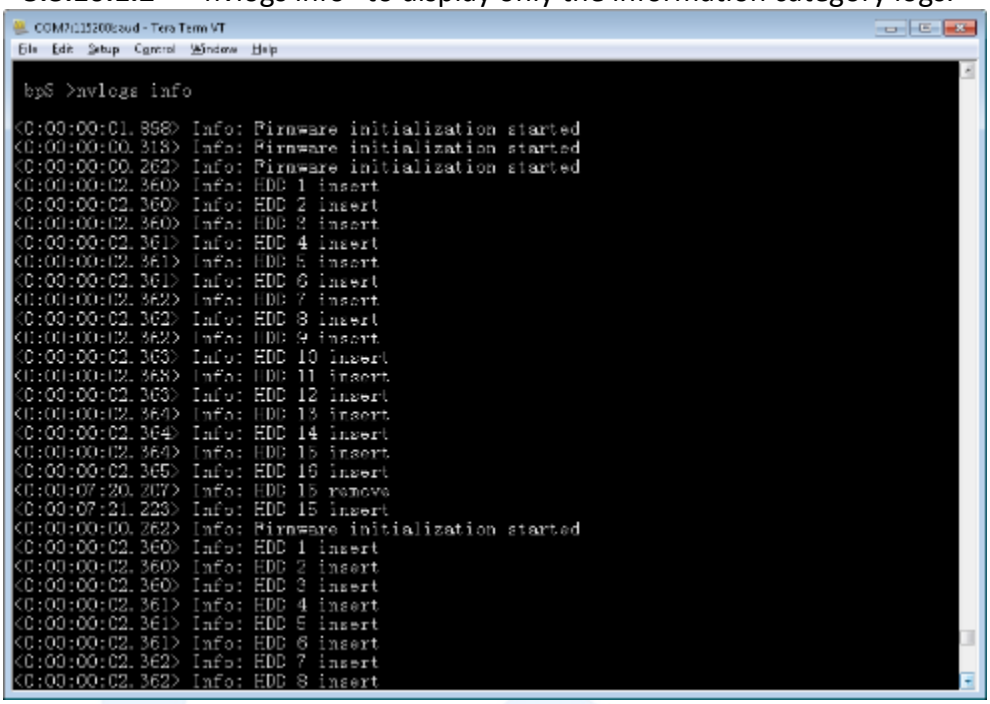

5.3.10.1.3 “nvlogs fail” to display only the Fail category logs.

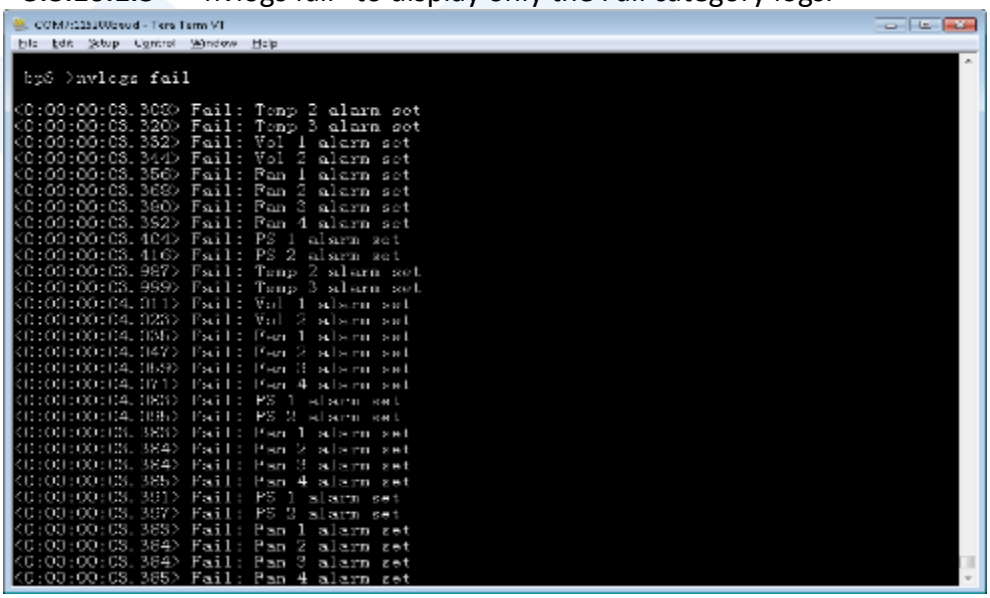

5.3.10.1.4 “nvlogs clear” to erase all the logs from NVRAM.

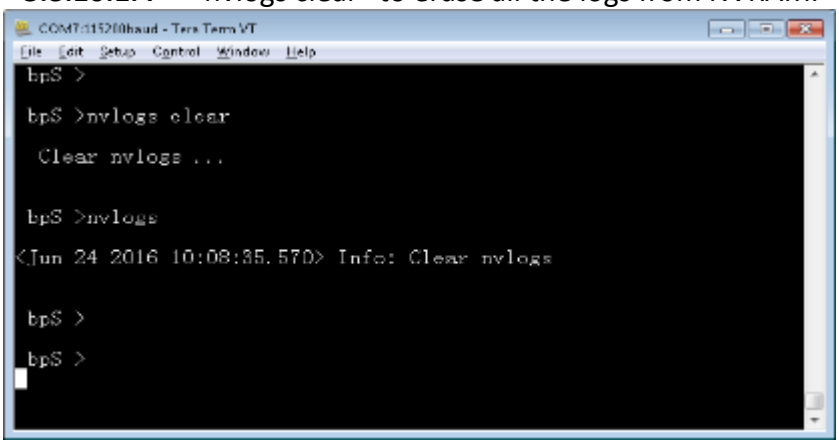

5.3.10.2 CLI (UART, Telnet, SSH with Ethernet Board)

Users can check the system logs by connecting UART cable to Expander RS-232 port directly, Telnet or SSH to the system and change directory to Primary or Secondary (if existed) SAS Expander layer.

5.3.10.2.1 "nvlogs" command to display all logs
5.3.10.2.2 "nvlogs info" to display information category logs.
5.3.10.2.3 "nvlogs fail" to display Fail category logs.
5.3.10.2.4 "nvlogs clear" to erase all the logs from NVRAM.

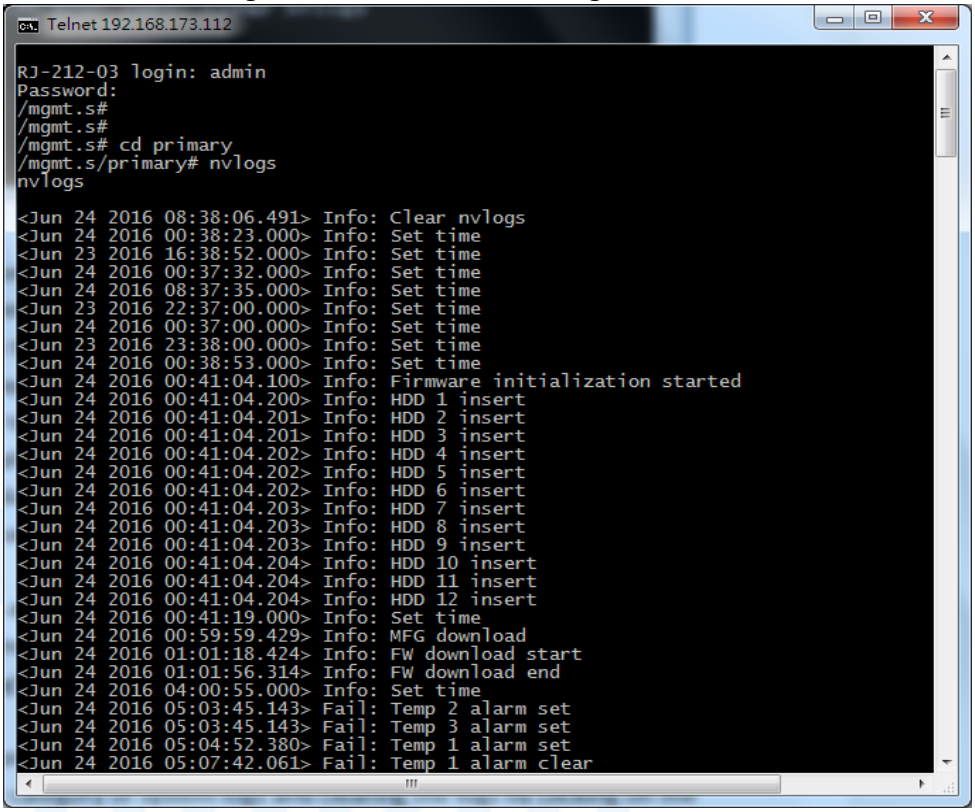

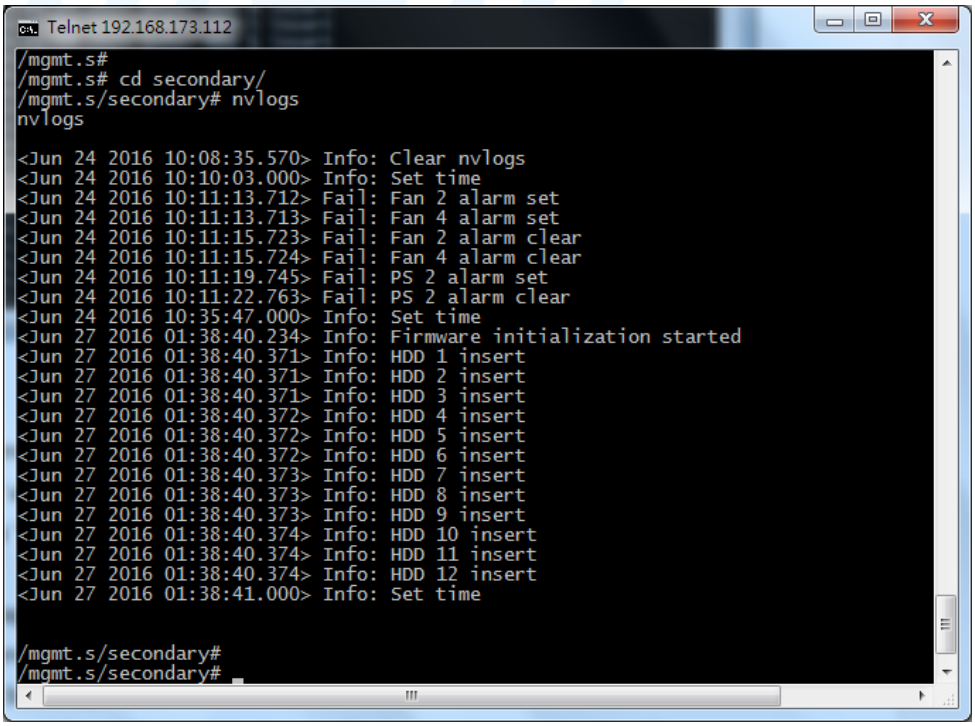

5.3.10.3 Web-GUI (With Ethernet Board)

5.3.10.3.1 Type system IP address on Web Browser URL filed to gain access to the system. After logging in, click “Log” button on the left pane to view and manage the Logs of the system.

5.3.10.3.2 The Log web page provides an easier way for managing the system logs including displaying different category of system logs and clearing the logs by clicking on the corresponding buttons.

5.3.10.3.3 Click “Refresh” and then “Process” button to display most current system logs.

5.3.10.3.4 Click “Waning Only” and then “Process” button to display the Warning category system logs.

5.3.10.3.5 Click “Info Only” and then “Process” button to display the Information category system logs.

5.3.10.3.6 Click “Clear” and then “Process” button to erase all the system logs.

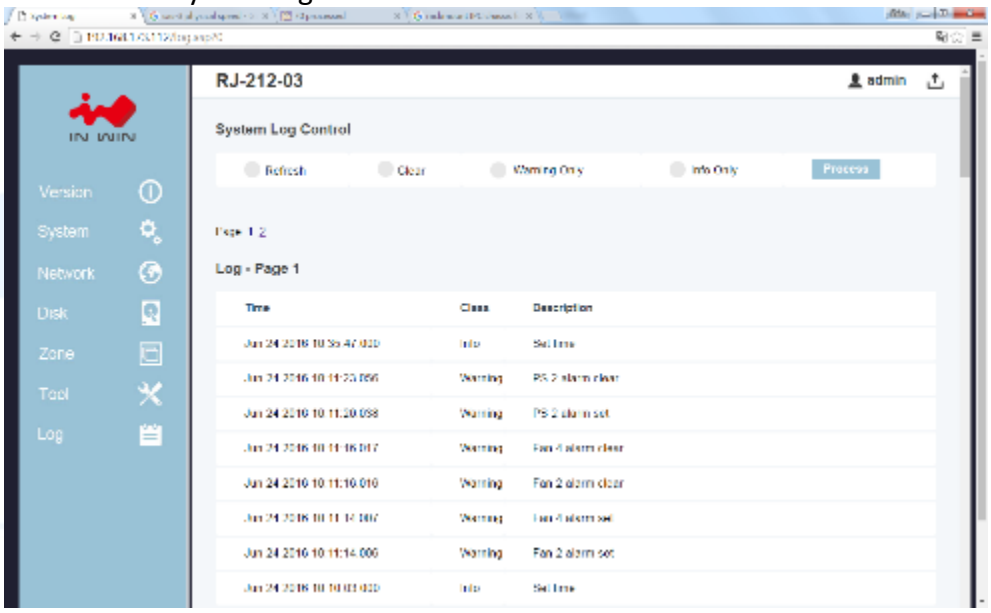

6 Compatibility Lists

To reach the best performance and avoid system failure, In Win strongly recommends users to choose the components from In Win's compatibility list. All the components are tested in In Win's lab, and assured the components are complementary with In Win's chassis.
You can download the latest updated device compatibility list from In Win's website:
https://www.in-win.com/en/ipc-server

7 Q&A

Section 1: Expander

1. **What is the In Win expander's function?**
   A: Expanded capacity, the expander can manage more SAS drives through a SAS cable in JBOD.

2. **Why is the IW-RS series storage server chassis built-in expander boards, and the IW-RJ series JBOD enclosures using expander modules?**
   A: IW-RS chassis needs a motherboard to compose a system, the expander board can work seamlessly with the motherboard to manage the drives. Different from the chassis, the IW-RJ JBOD enclosure uses hot-swappable expander modules to satisfy the requirements of both capacity expansion and JBOD redundancy.

3. **Why does the IW-RJ JBOD enclosure need 2 expander modules?**
   A: It is for redundancy. If the user does not need this function, a single expander module also works.

4. **What are the functions of the three connector ports on the expander module?**
   A: SAS 0 is the connecting port to Server 0/RAID or HBA 0, SAS 1/RAID or HBA 1 is to Server 1, and EXP port is cascaded with another JBOD to expand the capacity.

5. **Can I add more ports to the expander module?**
   A: First, please understand that these ports are used for cable connections. Second, only the Phy quantity of the expander chipset is allowed. Technically, this configuration can be worked out, yet technical alignment must be considered.

   For example, an expander with a 3x36R chipset has totally 36 Phys, and each port consumes 4 Phys; thus, we can design a 9-port expander (36/4 = 9) to connect 9 cables. However, once we have used all the Phys for connecting, resulting in no remaining Phys to connect HDDs, and this design cannot achieve the original function.

6. **Once I find that the expander is failing, what can I do?**
   A: IW-RS series: Power off the system, and make sure the system is completely shut down. Unplug the SAS cable to replace the expander board.
   IW-RJ series: Remove the faulty expander module, and replace a new expander module.

Section 2: Hard Disk

7. **What is the difference between SAS and SATA disk, and how to choose?**
   A: SATA has only one throughput channel for data transmission, SAS has two. Once the system is designed with redundant functionality, SAS disk provides performance and reliability. SATA provides a cost selective option.

8. **Are SAS and SATA disks compatible with both In Win IW-RS and IW-RJ series?**
   A: Yes, In Win IW-RS and IW-RJ series support both SAS and SATA disks.

9. **Can I mount 2.5" disks to 3.5" tool-less slots?**
   A: 3.5" tool-less slot does not support 2.5" disks at this moment. If this requirement is mandatory, please contact In Win sales for OEM service.

10. **Does the storage server or JBOD have to be fully populated to work?**
    A: No, you can mount partial bays and start the system. Once you need more storage space in the future, then add more disks.

11. **Can I mount both SAS and SATA disks in an enclosure?**
    A: Yes, it works. However, you may need to consider about potential alignment issues.

12. **If my system drive fails, can I replace the drive without shutting down the system?**
    A: By default, IW-RS series' two internal disks don't support hot-swap feature. You can order an optional 2-bay hot-swap system disk module to reach your purpose.

Section 3: RAID/ Cascade

13. **Is RAID card a required component for running a RAID system?**
    A: If your motherboard featured an onboard RAID function, or your OS supports software RAID, you do not need a RAID card. For technical details, please contact your motherboard or software vendor.

14. **How many units can be cascaded to the IW-RJ series JBOD?**
    A: In maximum, a daisy chain can stripe 48 disks. (RJ212 max. 24 disks, RJ316 max. 32 disks, RJ424 max. 48 disks)

15. **If I would like to cascade the JBOD, what components do I need?**
    A: You will need an SFF-8644 to SFF-8644 SAS cable, which meets the T10 standard. And the length we suggest is less than 3M to reach the best performance.

16. **If I only have an internal RAID controller card, and I would like to expand the capacity, how to add more disks?**
    A: IW-RJ series JBOD is designed for this purpose. If your RAID controller card does not have the external connecting port, you can use an SFF-8643 to SFF-8644 adaptor cable to connect the JBOD enclosure.

Section 4: Others

17. Why does the PSU have two modules? What are these two modules for?
A: Two PSU modules are used for redundancy. If you need this function, a PSU with two modules are required.

18. Can I add or reduce the quantity of fans?
A: The quantity of fans is related to the radiating efficiency. Usually, the quantity of fans depends on the system loading and the heat generation. Unless you have already tested, we strongly recommend not to change the default fans quantity.

19. Which parts support the hot-swap feature?
A: IW-RS storage server: Fan~~s~~, PSU and HDD.
IW-RJ JBOD enclosure: Fan~~s~~, PSU, expander module~~s~~ and HDD.

20. Are 12Gb SAS ports compatible with 6Gb SAS or 6Gb SATA ports? What adapter can be converted?
A: 12Gb SAS does not align with 6Gb SAS, In Win does not have an adapter to convert.

21. If the arm or handle is broken, how can I repair or replace it?
A: Please contact your local In Win partner, or contact support for replacement and repair services.

22. If I would like to modify the GUI, how can I access it?
A: The copyright of the GUI is owned by In Win. If you want to amend anything of the GUI, please contact In Win sales for ODM services.

8 Technical Support

If you need help with installation or troubleshooting, you can contact your local In Win partner, or send an e-mail to In Win's local contacts for technical assistance.