IW-MS08

User Manual

Table of Contents

PREFACE *1*

SAFETY INFORMATION *1*

CAUTION *2*

SPECIFICATIONS *3*

12Gb/s BACKPLANE SPECIFICATIONS *3*

1 Product Introduction *4*

1.1 Box Contents **4**

1.2 General Information **5**

1.2.1 Front Panel Controls and Indicators 6

1.2.2 Rear Panel Configuration 7

2 Hardware Installation *8*

2.2 Installing and Removing the Hard Drives **8**

2.2.1 Installing an External 3.5” HDD 9

2.2.2 Removing an External 3.5” HDD 10

2.2.3 Installing an External 2.5” HDD 10

2.2.4 Installing the Internal 2.5” HDDs/SSDs 11

2.2.5 Removing the Internal 2.5” HDDs/SSDs for OS 12

2.3 Installing and Removing the Fans **13**

2.3.1 Replacing the Middle Fan Modules 13

2.3.2 Replacing the Rear Fans 14

2.4 Installing the PSU Module **15**

2.4.1 Installing a Single PSU 15

2.4.2 Installing a Redundant PSU 16

2.4.3 Installing a Flex PSU 17

2.5 Installing the Motherboard **17**

2.6 Connecting Cables **18**

2.6.1 Connecting the HDD Backplane Through SAS Connectors 18

2.6.2 Connecting Backplane Through SAS Connectors 18

3 Backplane Introduction *20*

4 Compatibility Lists *20*

5 FAQs *21*

6 Technical Support *21*

PREFACE

Thank you for choosing the InWin IW-MS08 SMB Server. This manual is written for system technicians who are responsible for installation, troubleshooting, managing and repairing this server chassis. This document provides the overview of all the features of the chassis, a list of accessories or other components you may need to finish the installation, troubleshooting methods and instructions on adding and removing components on the InWin IW-MS08 SMB Server. For the latest version of this manual, you may visit InWin's server website.

SAFETY INFORMATION

To ensure a safe and smooth operation of your InWin IW-MS08 SMB Server, it is essential that you choose an appropriate location for the system, provide an appropriate operating environment and supply an adequate amount power for all components of the system. As you plan for installation, follow the guidelines below to ensure that the system and its environment are safely and appropriately positioned for efficient operation and service. Your system should be installed and serviced only by a qualified technician.

Environment Selection:
The system is designed to operate in a typical office environment:

- The location should be clean, dry and free of airborne particles.
- It should be placed in a well-ventilated room, and away from sources of heat including direct sunlight and radiators.
- It should be kept away from sources of vibration or physical shock.
- The space should be accommodated with a properly grounded wall outlet, and with sufficient space to access the power supply cords.
- The operating environment temperature should be around 0°C to 40°C (32°F to 104°F).

Heed Safety Instructions:
Before working with InWin IPC/storage/SMB server products, we strongly recommend you use this guide as a reference and follow the safety instructions. The instructions in this manual will help you ensure and maintain compliance with existing product certifications and approvals. Follow the described, regulated components mentioned in this manual. Use of non-UL listing products or other regulators may not comply with product regulations in the region(s) in which the product is sold.

System Power On/Off:
The power button DOES NOT totally turn off the system AC power. To remove the power of the system, you must unplug the AC power cord from the outlet or the system's power supply units. Make sure the power cord is unplugged before you open the chassis or add/remove any components.

Hazardous Conditions, Devices and Cables:
Hazardous electrical conditions can be present on/in power supply units and their cables. Disconnect the power cord and any other devices attached to the server before opening the case.

Failing to follow safety procedures will increase the risk of personal injury or equipment damage.

Electrostatic Discharge (ESD) and ESD Protection:
In most cases, ESD may damage disk drives, electronic boards and other parts. We recommend that you conduct installation only at an ESD free space. If not possible, perform ESD protection protocol by wearing anti-static wrist straps attached to the ground on any unpainted metal surface on your server during operation.

Installing or removing jumpers:
A jumper is a short length conductor used to close, open or bypass part of an electronic circuit. Jumpers on InWin backplanes have a small tab on top that you can pick up with your fingertips. Grip the jumper carefully, and plug the jumper to cover the jumper pins on the backplane. Once you need to remove the jumper, grip the jumper and carefully pull without squeezing.

CAUTION

To avoid damage and maintain your safety, please read the following terms listed below:

1. Do not populate hard drives and turn on the power until the system has stabilized.
   Make sure hard drives and other components are properly connected before turning on the system.
2. Tighten or loosen all screws with a screwdriver.
3. Apply the correct screws packed in the accessory box.
4. For your safety, please have at least two people lift and install the unit in its designated area.
5. Before mounting the unit to the cabinet, make sure the rail is installed correctly.
6. When installing and removing any module or part, please use the handles.

SPECIFICATIONS

Model Name	IW-MS08
M/B Form Factor	Micro-ATX (9.6” x 9.6”), Mini-ITX (6.7” x 6.7”)
Drive Bay	External: Slim ODD x 1 Hot-swap 3.5” x 8 Hot-swap 2.5” x 2 for OS (Optional) Internal: 2.5” x 2
Power Supply	Supports Form Factor: 1U Redundant 300W 1U Single 500W 1U Flex 315W
Indicator	Power LED, LAN1/LAN2 LED, System LED, ID LED, HDD LED
Front Control Panel	Power On/Off, Reset, USB 3.0 x 2
Backplane	Mini-SAS HD, SFF-8643 (12Gb/s x 2 without Expander)
Cooling Fan	80 x 25mm PWM Fan x 4
Expansion Slot	Full Height PCI Slot x 4
Material	Material: SECC Thickness: 1.0mm
Product Dimensions (DxWxH) w/o Front Door	513 x 170 x 340mm (20.2" x 6.7" x 13.4")
Package Dimension (DxWxH)	630 x 450 x 310mm
Weight	• Net Weight: 10.37kg • Gross Weight: 12.52kg
Cubic Feet	3.1
Container Information	Single Packing with Pallets: • 20’:240pcs • 40’: 504pcs • 40’HQ: 588pcs

12Gb/s BACKPLANE SPECIFICATIONS

Backplane	3.5" HDD 4 bay backplane with SAS/SATA 4 port module
Dimensions (W x H)	111.5mm x 111.5mm
Backplane Type	Passive
Host Interface	SFF-8643 x 2
HDD Interface	SAS/SATA 3.5" x 8

- The actual product is subject to change without prior notice. In Win Development Inc. reserves the right to make any final modifications.
- The adjacent image is for reference only. All hardware components and optional parts are not included.

1 Product Introduction

1.1 Box Contents

When you open the IW-MS08 box, the contents should include the following:

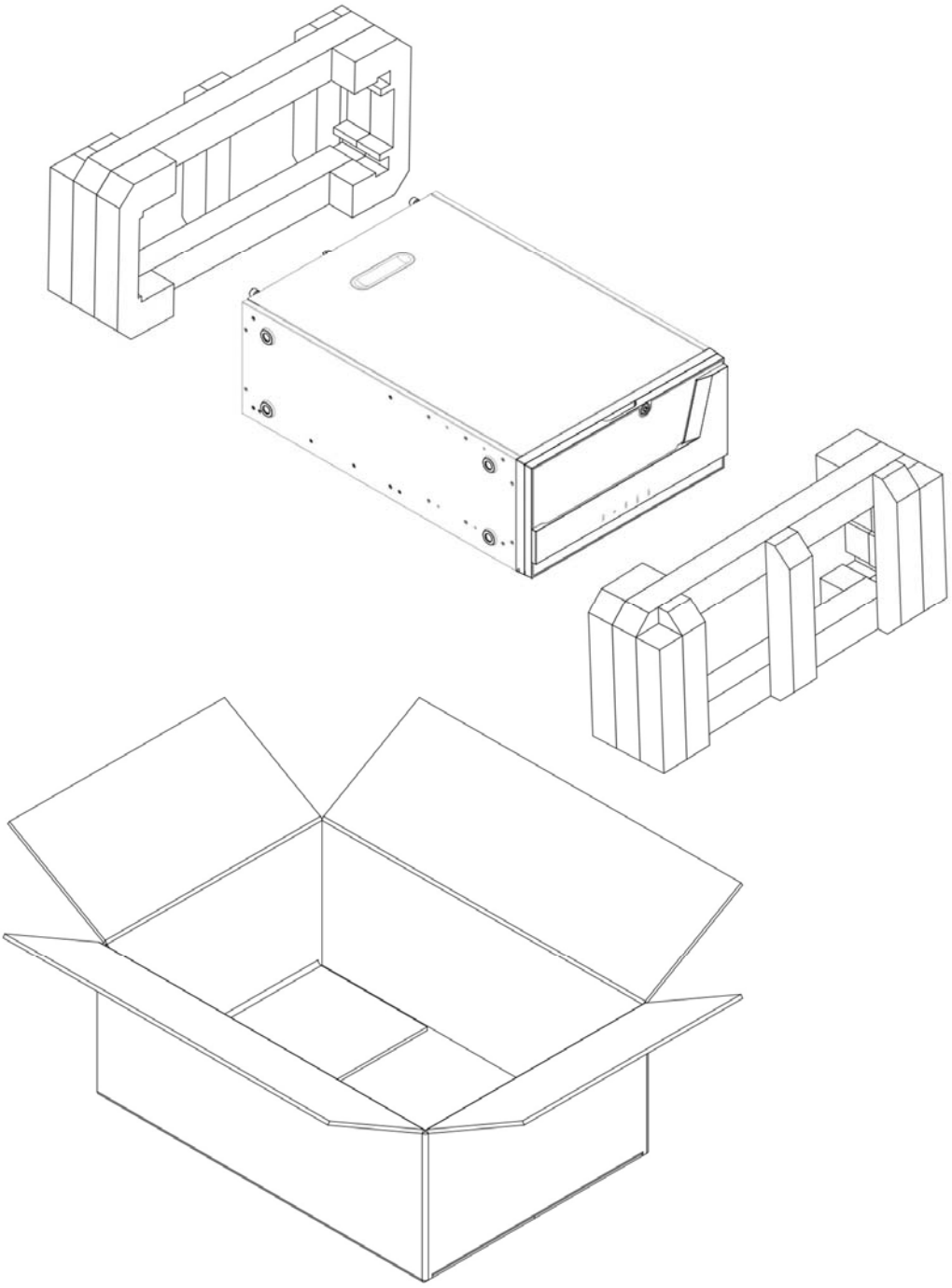

1.2 General Information

When you open the chassis, it should reflect the diagram's image.

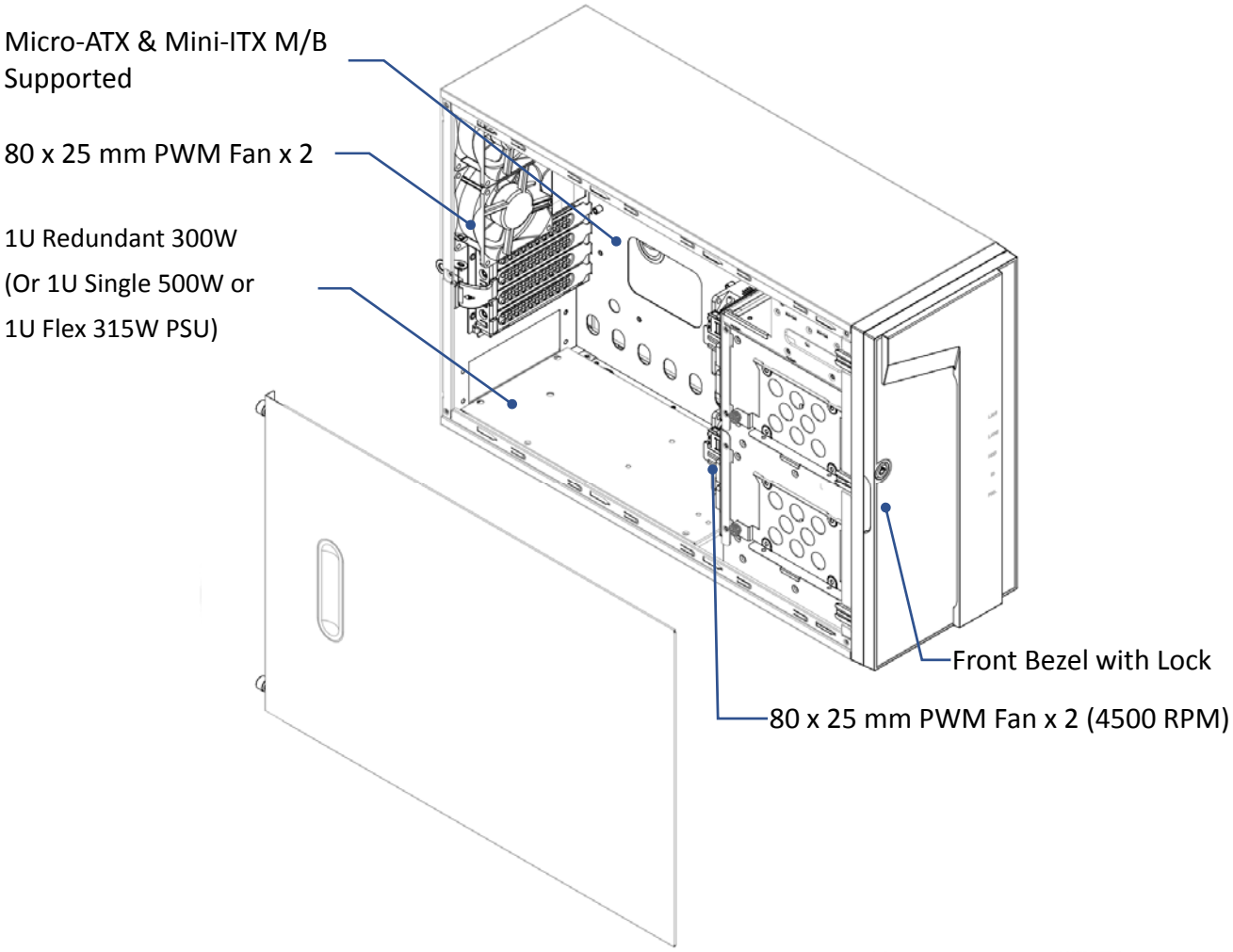

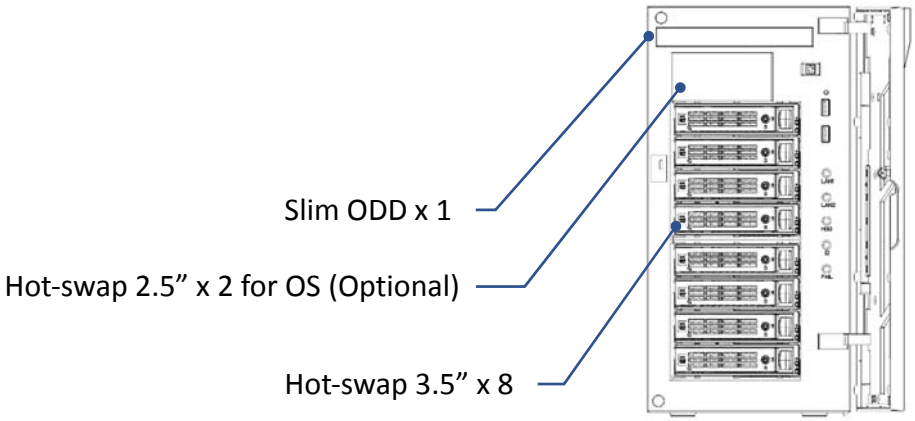

1.2.1 Front Panel Controls and Indicators

The IW-MS08 supports eight 3.5" drive bays with two 4-port 12Gb/s SAS/SATA backplane modules and two optional 2.5” drive bays for OS. The control panel, USB I/O ports and indicators are located on the right.

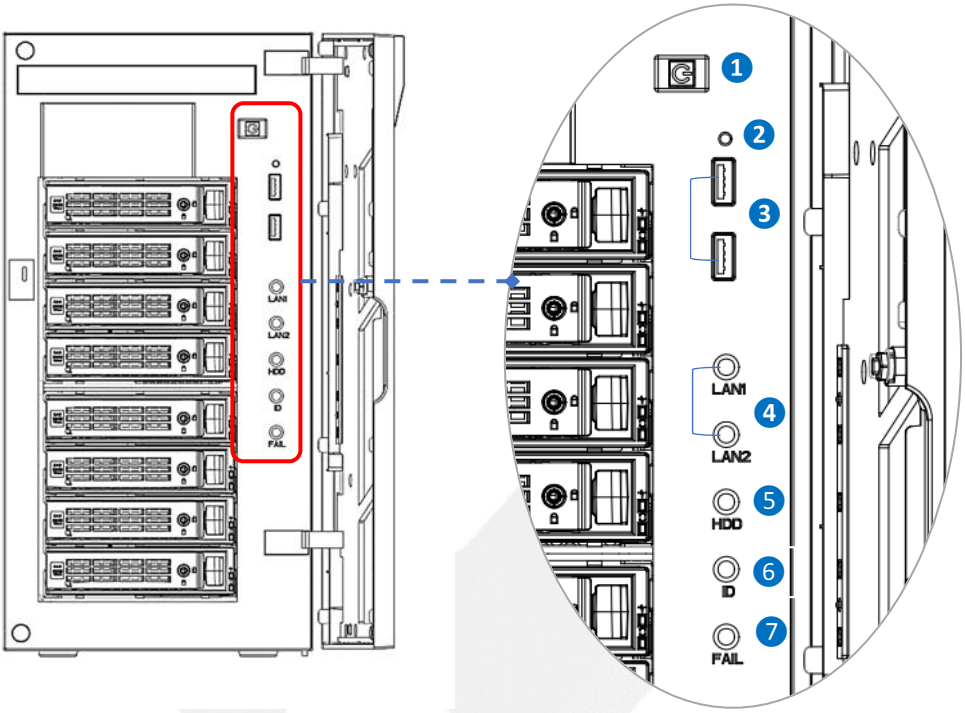

No.	Name	Color	Status	Description
1	Power ON/OFF Button with LED	Blue	Solid on	System is powered on
		N/A	Off	System is off
2	System Reset	N/A		Press the button to reset system
3	USB3.0 Connector	N/A		USB devices connection
4	LAN LED	Amber	Blinking	Link between system and network
		N/A	Off	No data transmission or receiving is occurring
5	Hard Disk LED	Green	Blink	System HDD accessing
6	Chassis ID with LED	Blue	Solid on	Press the button to activate system identification
7	System Fail LED	N/A	Solid on	System ok
		Red	Solid on	System faulty

1.2.2 Rear Panel Configuration

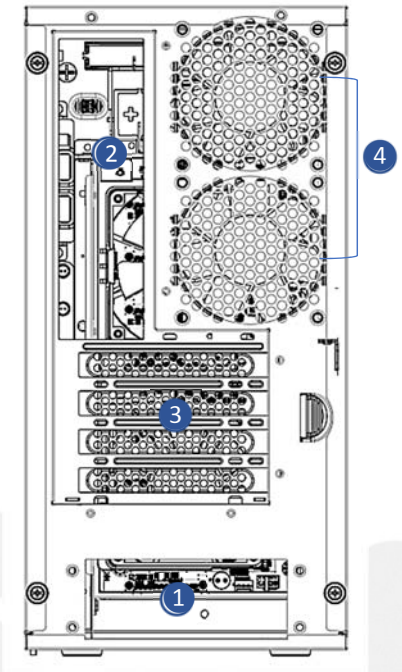

No.	Name	Description
1	PSU Bracket	The PSU bracket is available for mounted redundant, single or Flex PSUs.
2	System I/O (Depends on M/B Specifications)	The I/O shield should come with the motherboard or provided by motherboard vendors
3	4 Full Height PCI-E Slots	The slots support full height cards. The bracket should be removed before using.
4	Rear Fans	80x25mm PWM fans x 2

2 Hardware Installation

2.1 Opening the Chassis

Remove the side panels before installing or replacing any components including motherboards, fans, etc.

Step 1: Loosen the two thumbscrews at the back of chassis.
Step 2: Pull the hand hole on the side panel backwards and remove it from the chassis.
Step 3: If necessary, repeat Step 2 to remove the other side panel.

Step 1

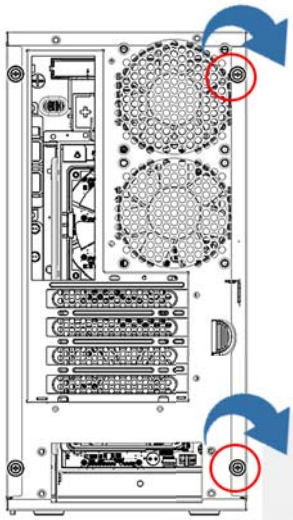

Step 2

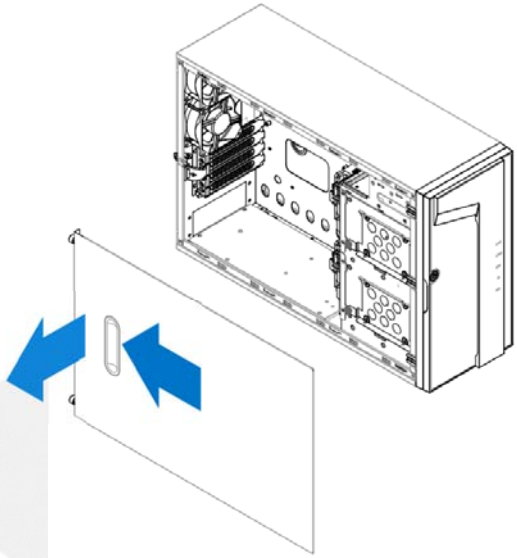

Step 3

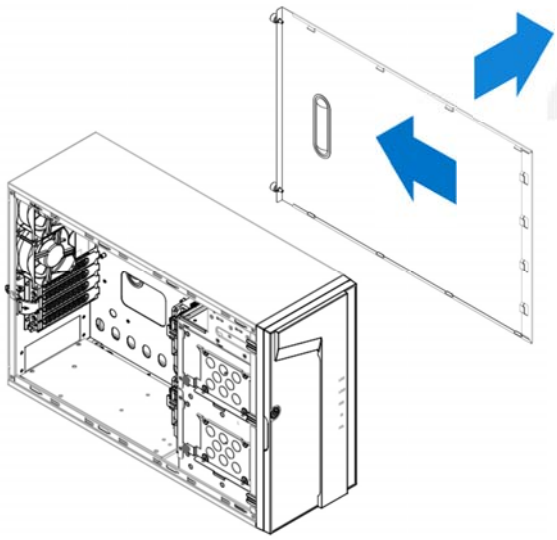

2.2 Installing and Removing the Hard Drives

The IW-MS08 features up to 12 storage mounting areas with 8 external 3.5" hot-swap bays, 2 optional 2.5" hot-swap bays for the operating system and also supports 2 internal 2.5" hard drives.

2.2.1 Installing an External 3.5” HDD

Step 1: Insert the key into the lock and turn counterclockwise to release the keylock and open the door.
Step 2: Press the release tab then pull the handle outward to reveal the disk tray.
Step 3: Place the hard drive into the tray. Secure the hard drive on the tray with 4 screws.
Step 4: Insert the HDD tray back into the slot and push the lever back until it clicks.
Step 5: Close and lock the front door.

Step 1

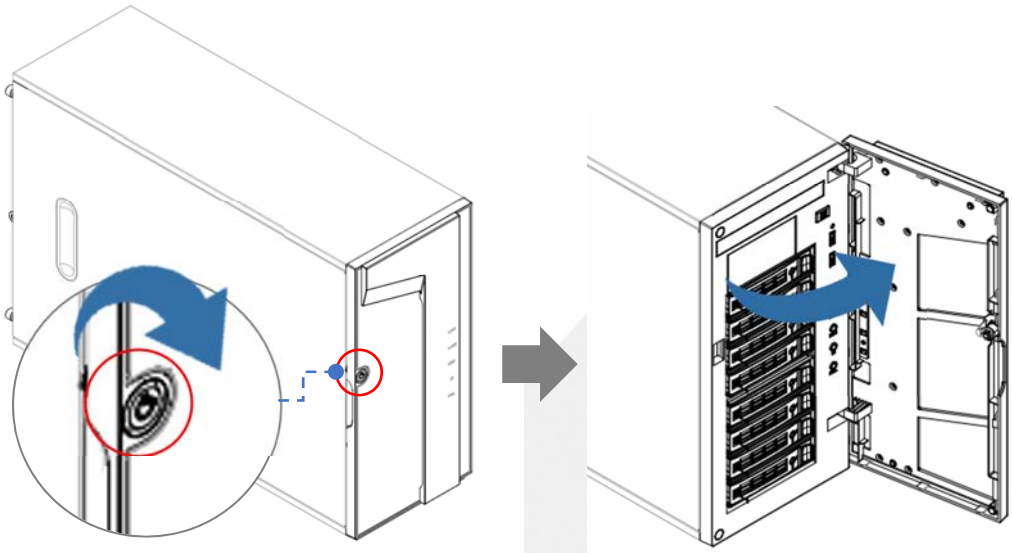

Step 2

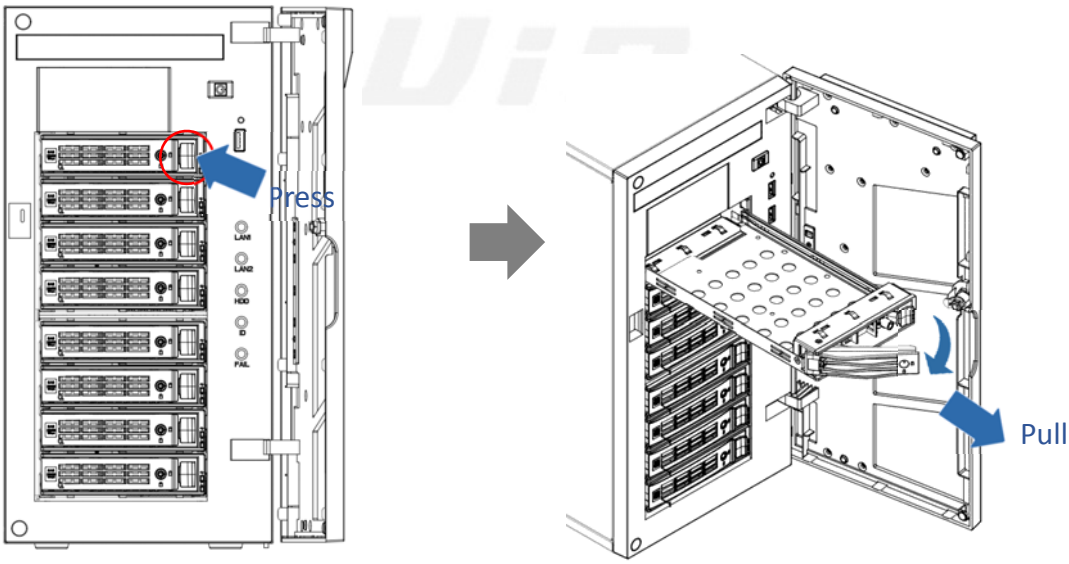

Step 3

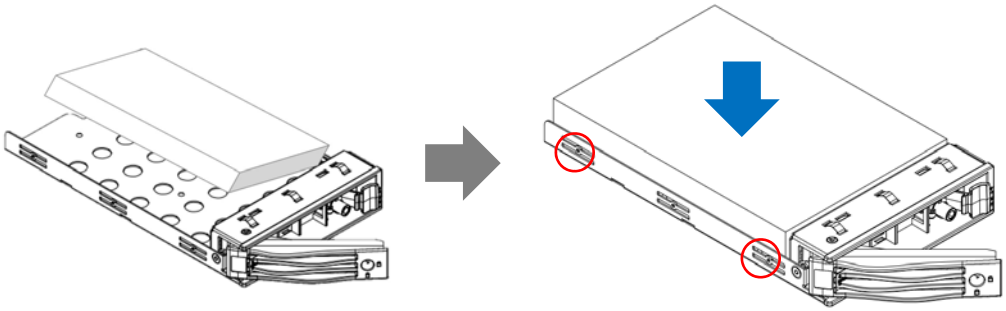

Step 4

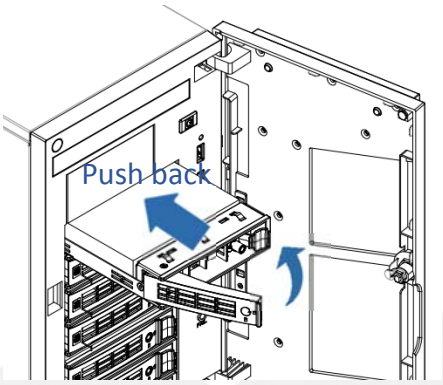

2.2.2 Removing an External 3.5” HDD

Step 1: Refer to steps 1-2 of 2.2.1.
Step 2: Loosen the 4 screws on both sides of the 3.5” HDD tray, then remove the 3.5” HDD.
Step 3: Refer to steps 4-5 of 2.2.1.

Step 2

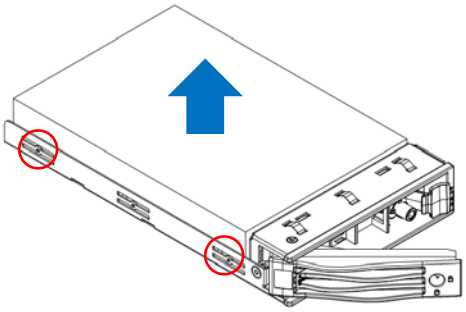

2.2.3 Installing an External 2.5” HDD

Step 1: Refer to step 1 of 2.2.1 to open the front door.
Step 2: Remove the 2.5” HDD tray cover.
Step 3: Insert the 2.5” HDD cage from the inside outward and secure the HDD cage on both sides of the tray with 4 screws.

Step 4: Refer to steps 3-4 of 2.2.1 to install the 2.5” HDD.
Step 5: Refer to steps 4-5 of 2.2.1 to close and lock the front door.

Step 2

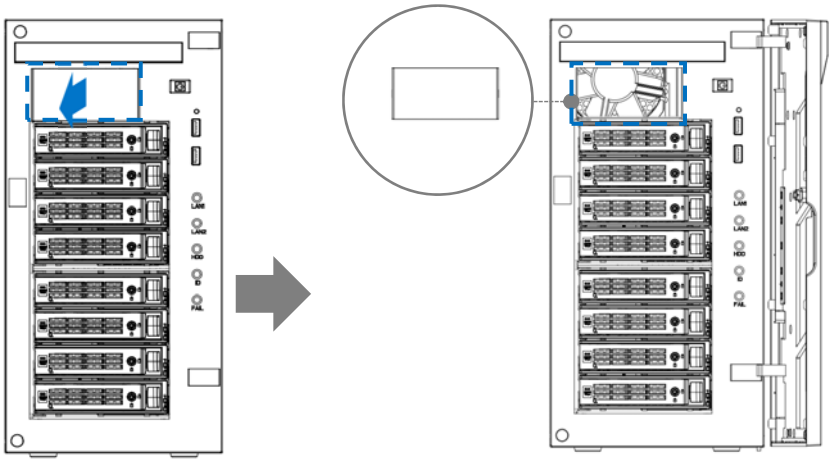

Step 3

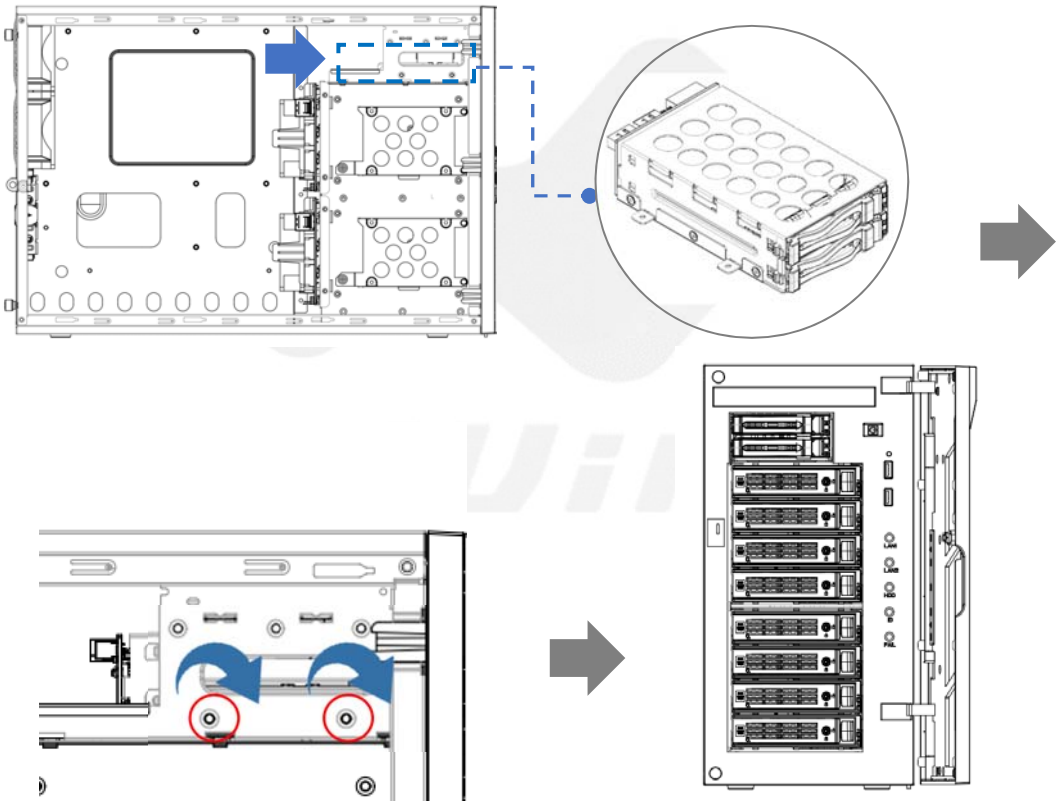

2.2.4 Installing the Internal 2.5” HDDs/SSDs

Step 1: Loosen the thumbscrew counterclockwise and take off the HDD trays.
Step 2: Insert the hard drive into the tray and use 4 screws to secure the HDD on the HDD tray.
Repeat this step to install the second 2.5” HDD.
Step 3: Place the 2.5” HDD trays on the side of the 3.5” HDD cage, then tighten the thumbscrews to secure the trays.
Step 4: Connect the HDD to the motherboard cables.

Step 1

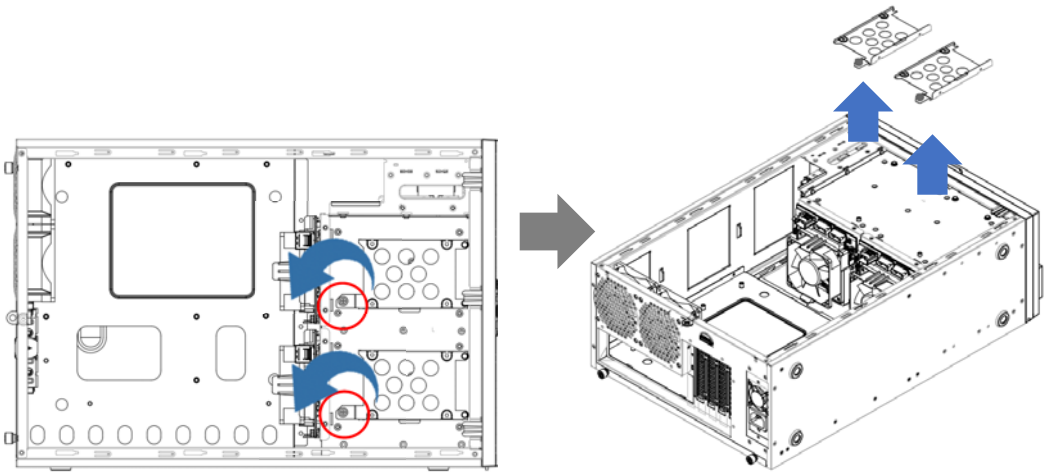

Step 2

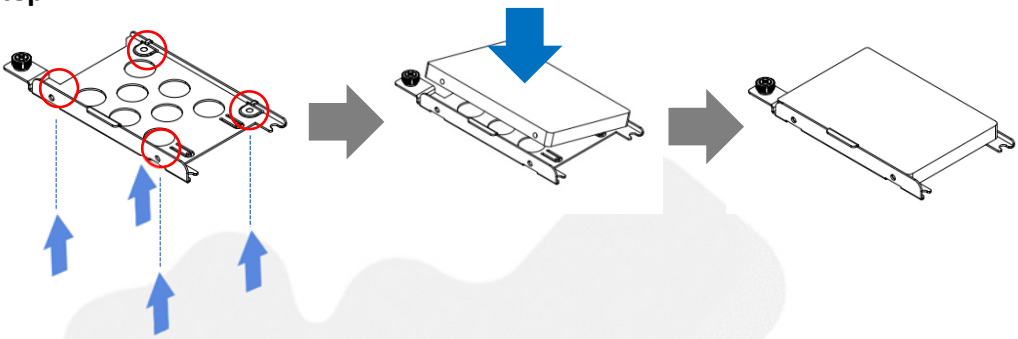

Step 3

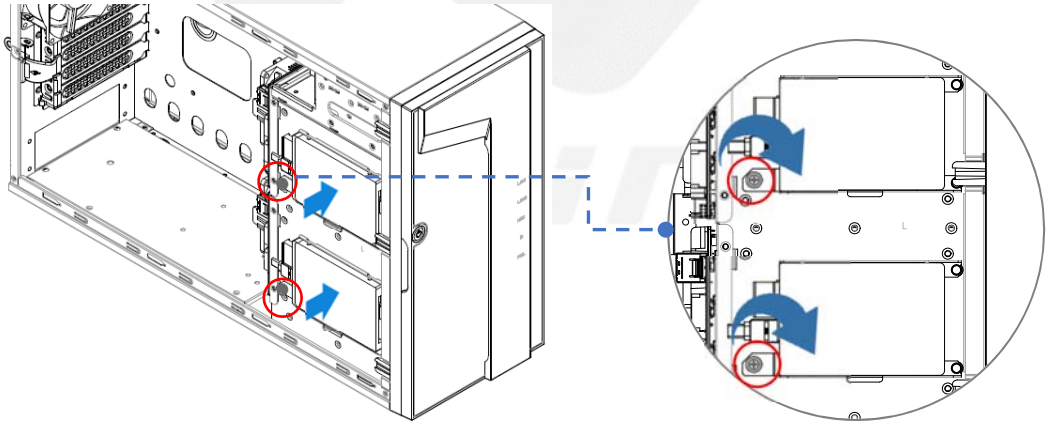

2.2.5 Removing the Internal 2.5” HDDs/SSDs for OS

Step 1: Unplug the HDD cables.
Step 2: Refer to step 1 of 2.2.4 to remove the HDD trays.
Step 3: Loosen 4 screws on the bottom of the tray, then remove the 2.5” HDD.
Repeat this step to uninstall the second 2.5” HDD.
Step 4: Refer to step 3 of 2.2.4 to secure the HDD trays to chassis.

Step 3

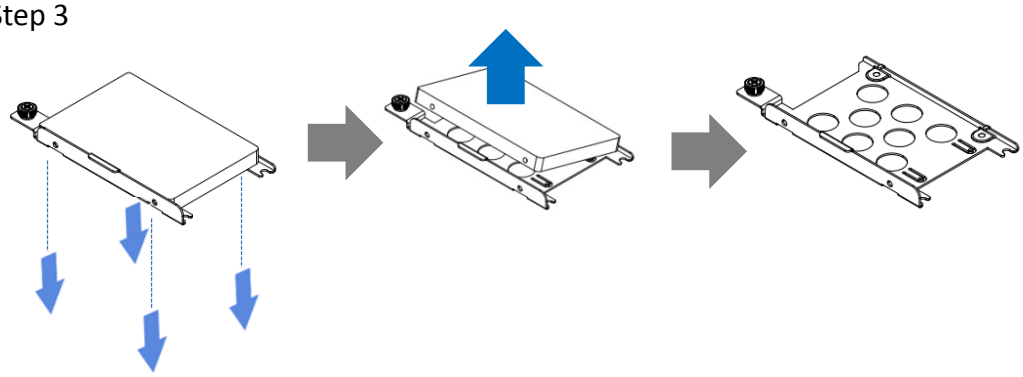

2.3 Installing and Removing the Fans

The IW-MS08 is equipped with four 80 x 25mm PWM fans, including two fan modules in the middle and two on the rear panel for flexible cooling efficiency.

2.3.1 Replacing the Middle Fan Modules

Step 1: Choose the fan that needs to be replaced and unplug the fan cables. Release both sides clips of the fan holder to pull out the fan bracket.
Step 2: Push the new fan back into the fan holder until it clicks. Once the fan is connected, it will begin working.
Step 3: Connect the fan to the motherboard cables.
Step 4: Repeat the above steps to replacing the other fans.

Step 1

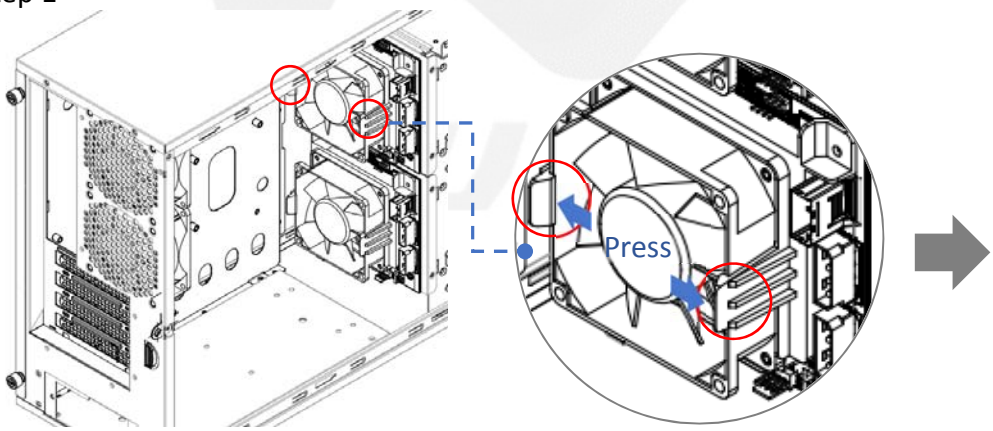

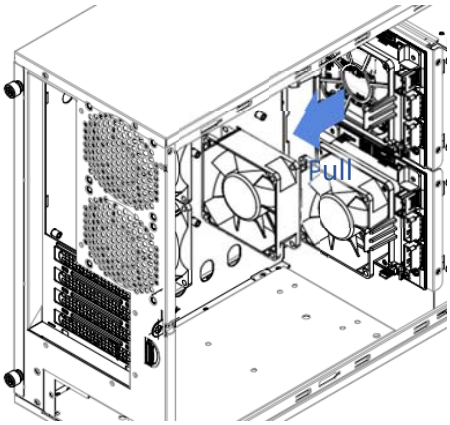

Step 2

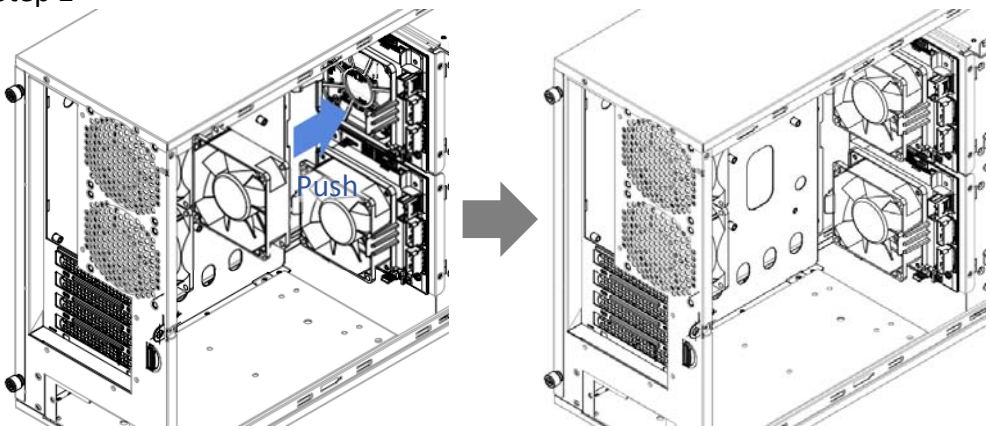

2.3.2 Replacing the Rear Fans

Step 1: Remove the fan cables. Loosen the 4 screws on the fan housing corners to remove the fan from the chassis.
Step 2: Place the new fan into the position, and tighten the 4 screws to secure it.
Step 3: Connect the fan to the motherboard cables.
Step 4: Repeat the above steps to replacing the other fans.

Step 1

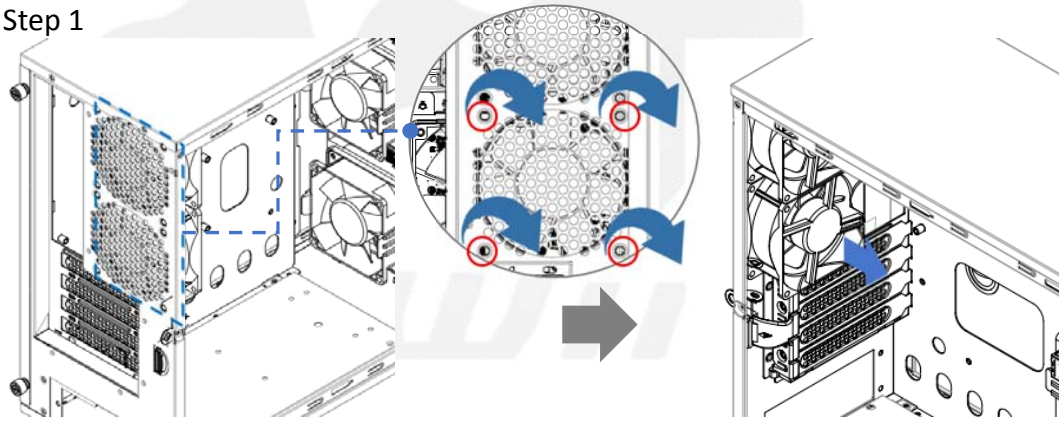

Step 2

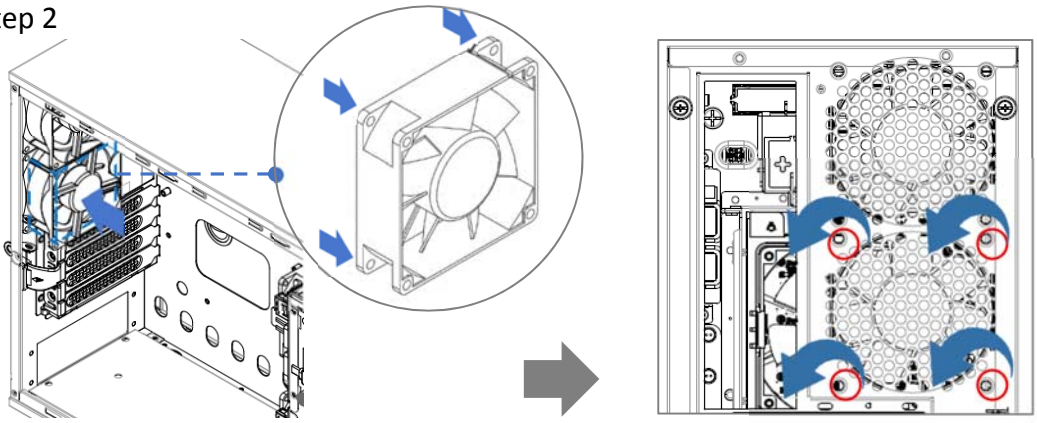

2.4 Installing the PSU Module

InWin IW-MS08 supports 1U Flex, single and redundant power supply units. Users can select power supplies best suited to their desired application.

NOTE: ***1. Different PSUs may need different rear and side brackets. The accessory box includes bracket sets for supporting models.***

2. Make sure the label is facing upward and push the power supply module into the PSU mounting area.

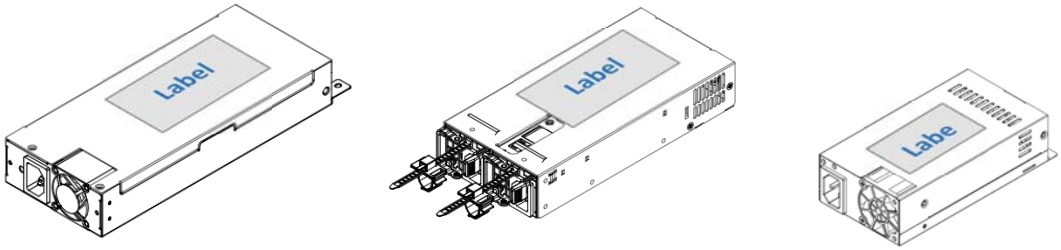

2.4.1 Installing a Single PSU

Step 1: Secure the PSU mounting bracket to the middle of the chassis.
Step 2: Tighten the 2 screws to secure the single PSU bracket to the single PSU.
Step 3: Place the PSU with the bracket to the rear of the chassis.
Step 4: Align the screws holes to the single PSU bracket and the rear panel, then tighten the 4 screws.
Step 5: Align the screws holes to the end of single PSU and the PSU mounting bracket, then tighten the 2 screws.
Step 6: Connect the PSU cables.

Step 1

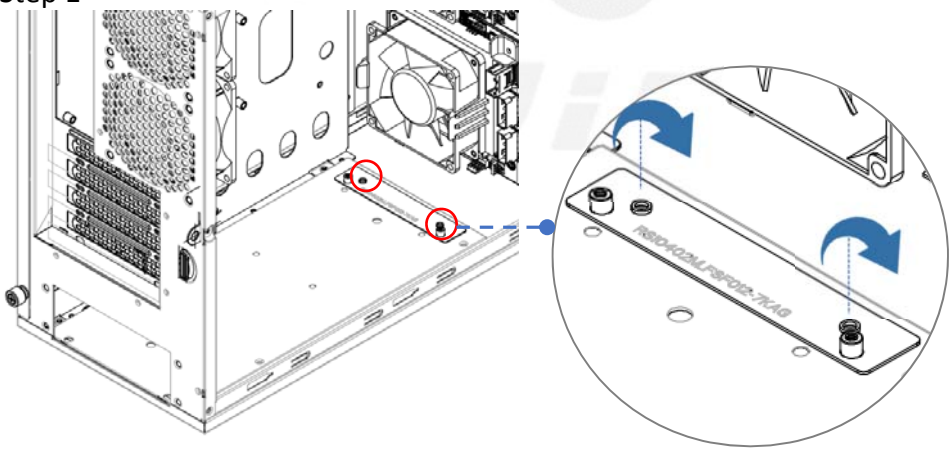

Step 2

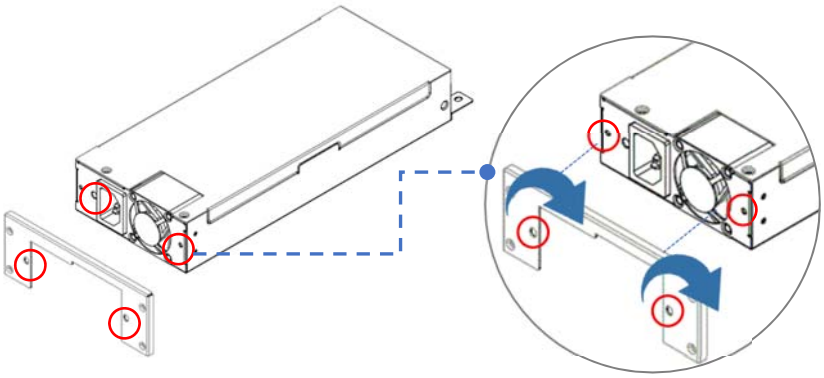

Step 3-5

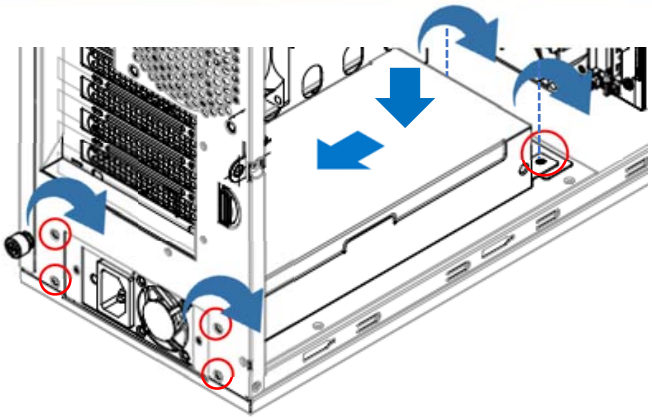

2.4.2 Installing a Redundant PSU

Step 1: Refer to step 1 of 2.4.1 to secure the PSU mounting bracket.
Step 2: Tighten the 4 screws to secure the 2 redundant PSU front brackets to the front of the redundant PSU. Use the 2 screws to secure the rear bracket to the back of the redundant PSU.
Step 3: Place the PSU with the bracket to the rear of the chassis.
Step 4: Align the screws holes to the redundant PSU front bracket and the rear panel then tighten the 4 screws.
Step 5: Align the screws holes to the redundant PSU rear bracket and the PSU mounting bracket, then tighten the 2 screws.
Step 6: Connect the PSU cables.

Step 2

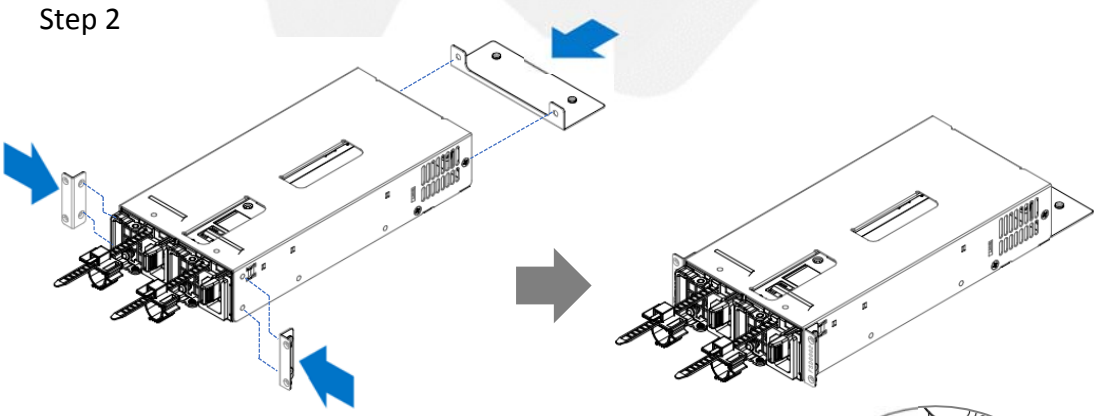

Step 3-5

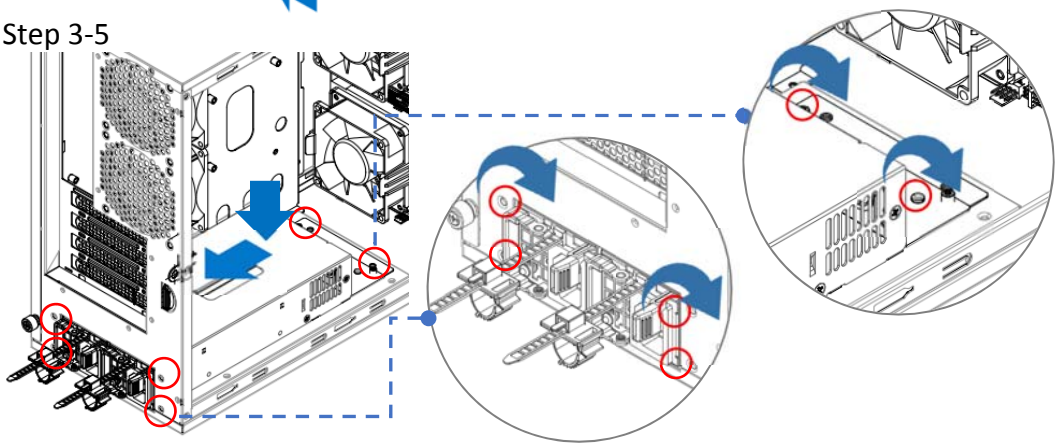

2.4.3 Installing a Flex PSU

Step 1: Tighten the 2 screws to secure the single PSU bracket to the single PSU.
Step 2: Place the PSU with the bracket to the rear of the chassis.
Step 3: Align the screws holes to the single PSU bracket and the rear panel, then tighten the 4 screws.
Step 4: Connect the PSU cables.

Step 1

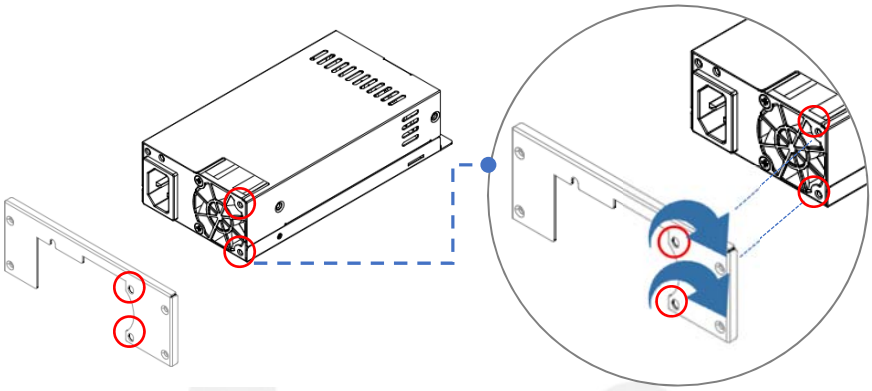

Step 2-4

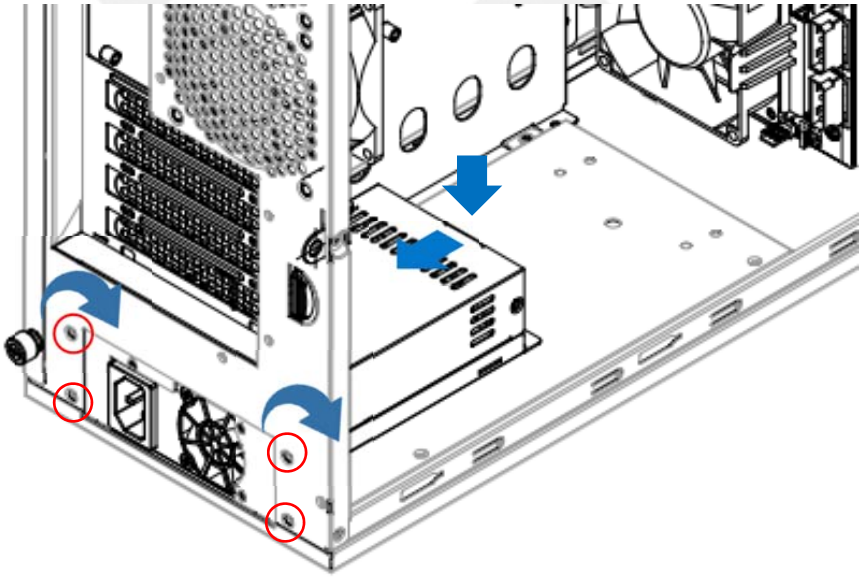

2.5 Installing the Motherboard

Before installing the motherboard, please find the I/O shield from your motherboard package, and install it into the system I/O window (Refer to 1.2.2). If you cannot find the I/O shield, please check with your motherboard vendor, or contact InWin for an I/O shield OEM service.

Step 1: Remove the plastic dots that are covering the motherboard mounting holes.
Step 2: Secure the pillars on the M/B tray which match with the M/B fixed points.
Step 3: Align the motherboard down to the chassis.
Step 4: Fasten the screws to secure the motherboard in the chassis.

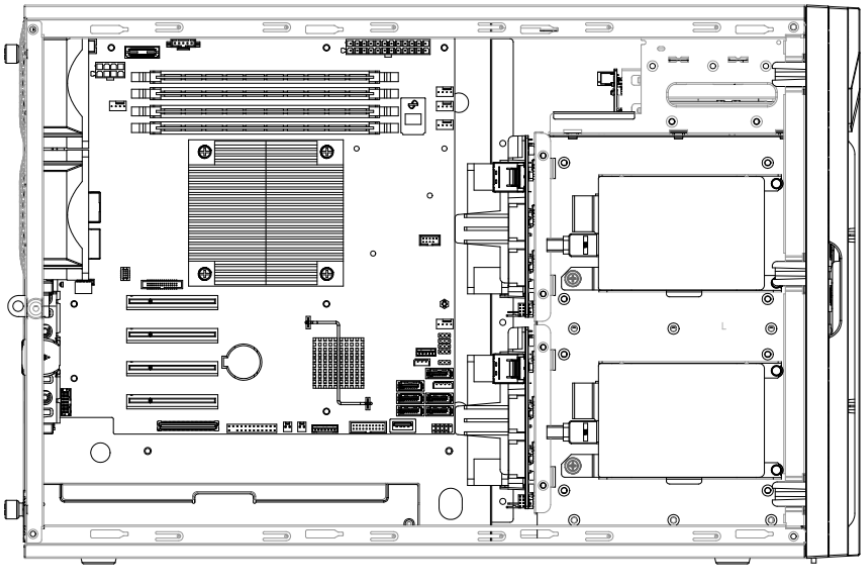

2.6 Connecting Cables

The high performance of the InWin backplane with expansion boards are a cost-effective solution for supporting Intel Purley platform by adding NVMe support.

The active backplanes support state-of-the art SAS3 12Gbps HDD/SSD and is also backward compatible with SAS 6Gbps, SATA 6Gps and SATA 3Gps HDD/SSD. Some of the backplanes support NVMe SSDs through either OcuLink x 4 or SlimSAS x 4 connectors.

2.6.1 Connecting the HDD Backplane Through SAS Connectors

Connect the SAS cable to the backplane and your motherboard or RAID controller. InWin provides a verified SAS cable for installation, please contact InWin's local partners and sales representatives to get more information.

2.6.2 Connecting Backplane Through SAS Connectors

As described in 1.2.1, the InWin IW-MS08 has a built-in front control panel and USB access ports. You need to connect the connectors to the pins on the motherboard to activate the functions. You can find the pin function and location information from your motherboard's user guide.

USB 3.0

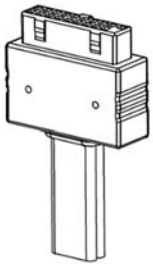

LED Connector

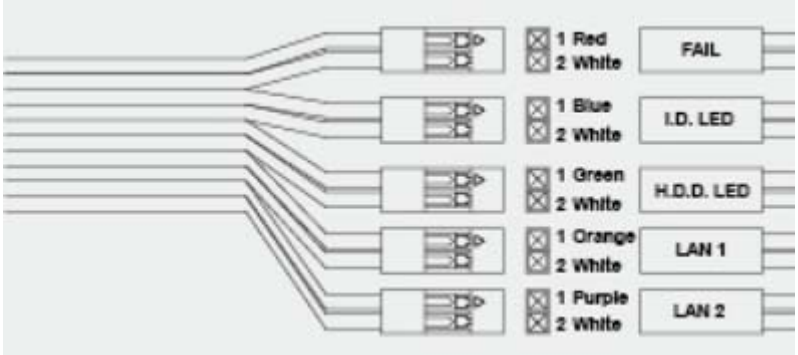

Connector Name	Color	Front I/O Indication
System LED	Red/White	System Fail LED
ID LED	Blue/White	Chassis ID Button with LED
HDD LED	Green/White	HDD Active LED
LAN LED 1	Orange/White	LAN LED
LAN LED 2	Purple/White	LAN LED
USB 3.0 Connector	Black Flat	USB 3.0

※ ***If the LED power connector on the motherboard is 3-pin, please use the 2-to-3-Pin convertor from the accessory box.***

2.7 Close the Chassis

Step 1: Place the side panels on the chassis. Push the side panel forward until it reaches back to the original position.

Step 2: Tighten the two thumbscrews of each side panel at the back of chassis.

Step 1

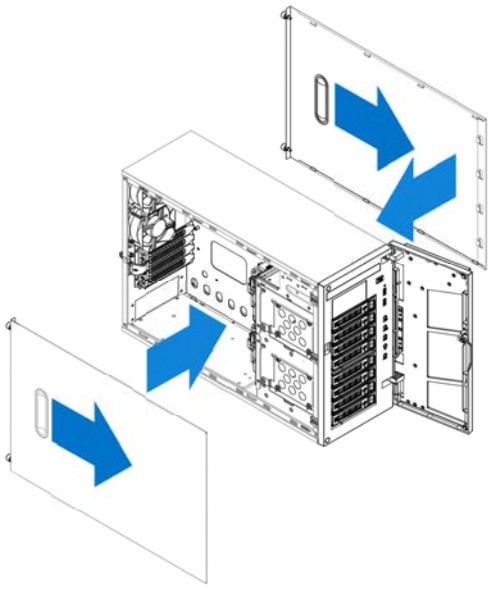

Step 2

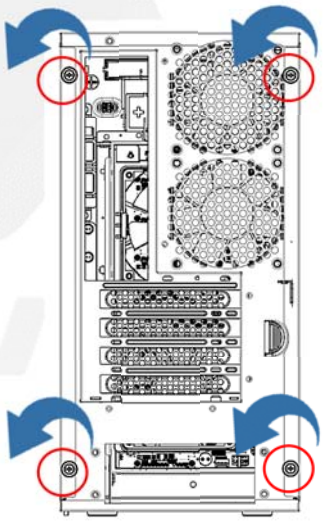

3 Backplane Introduction

The backplane varies by order.
Please refer to the backplane user guide to complete the installation.
The download link is located in the download section of each product page on the InWin website.
Visit InWin website: https://www.in-win.com/en/ipc-server.

Top Side

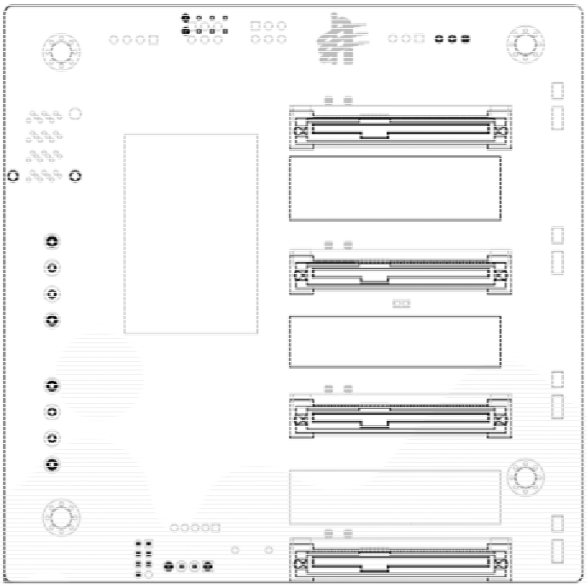

Bottom Side

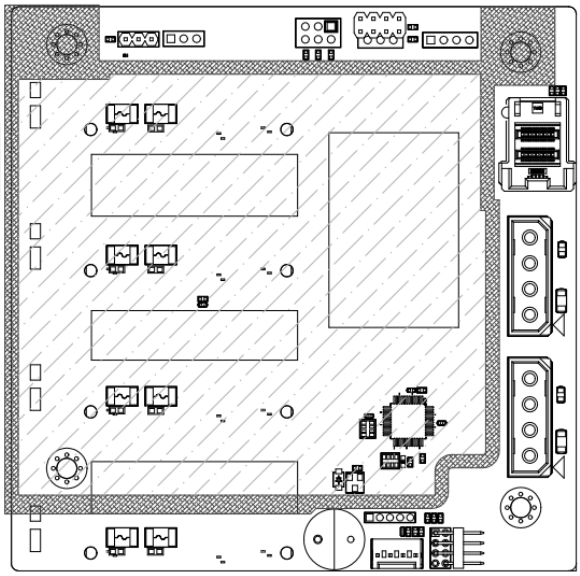

4 Compatibility Lists

To reach the best performance and avoid system failure, InWin strongly recommends users to choose the components from InWin's compatibility list. All the components are tested in InWin's lab, and assured the components are complementary with InWin's chassis.
You can download the latest updated device compatibility list from InWin's website:

https://www.in-win.com/en/ipc-server

5 FAQs

a. What are the functions of the backplane?

A: The backplane is the bridge which connects the hard drives and export the signal to the motherboard. Also, the backplane provides the LED signals indicating the status of the hard drives, and alarming when the system temperature is abnormal.

b. Does the backplane support 12Gb SAS?

A: The InWin IW-MS08 comes with 12Gb SAS backplane by default.

c. Does the chassis support 3.5", 2.5", SAS and SATA drives? Can I mix different types of drives in an enclosure?

A: The InWin IW-MS08 supports both 3.5" and 2.5" form factor SAS/SATA disks. It allows different types of disks to work together in an enclosure. Yet, to reach the best performance, we recommend following the motherboard or RAID controller vendor's instructions regarding drive performance.

d. Does the chassis support flash drives?

A: Any SSD that supports SAS or SATA connection can be attached to the InWin IW-MS08 but be aware that NVMe SSDs are not supported.

e. Does the chassis support mirrored OS disks?

A: The InWin IW-MS08 supports 2 internal disks, yet, the disk mirroring is defined by your motherboard or your RAID 1 controller card. Please check the vendor's guide to mirror your OS disks properly.

f. Can it support small form factor motherboards such as M-ATX and Mini-ITX?

A: The InWin IW-MS08 does support small form factor motherboard sizes including Mini-ITX and Micro-ATX. Unless you would like to mount a customized motherboard, which does not meet Intel's standard, you will need to contact InWin's partners or sales representatives for customization services.

g. Do I need a RAID controller card to connect the backplane?

A: If you would like to construct a solid hardware RAID system, it is required. However, using the RAID controller card or not depends on your purpose and budget. We recommend discussing with InWin's channel partners for their suggestions.

h. Where can I buy the SAS cable?

A: 12Gb SAS to 4 SATA or 12Gb SAS to 12Gb SAS are standard cables that you can easily buy from many vendors. You can buy the verified cable from InWin to eliminate the compatibility issues.

6 Technical Support

If you need help with installation or troubleshooting, you can contact your local InWin rep, or send an e-mail to InWin's local contacts for technical assistance.