IW-RS224-07

User Manual

Table of Contents

PREFACE 1

SAFETY INFORMATION 1

CAUTION 2

SPECIFICATIONS 3

12Gb/s BACKPLANE SPECIFICATIONS 4

1 Product Introduction 5

1.1 Box Contents 5

1.2 Accessories Box 6

1.3 General Information 7

1.3.1 Front Panel Controls and Indicators 8

1.3.2 Rear Panel Configuration 9

2 Hardware Installation 10

2.1 Motherboard & Expansion Card Installation 10

2.2 HDD Tray Installation 10

2.3 Fan Installation 10

2.4 Power Supply Installation 10

2.4.1 Power Supply Cable Information 11

2.5 Connecting Cables 12

2.5.1 Connecting Expander Through SAS Connectors 12

2.5.2 Connecting LED Cable, Front Control Panel and Front USB I/O Ports 13

2.6 Installing the Slide Rail 14

2.6.1 Identifying the Slide Rail 14

2.6.2 Removing the Inner Rail and Sliding the Intermediate Rail Back 14

2.6.3 Attaching the Inner Rail to the Chassis 14

2.6.4 Mounting the Rail Bracket to the Cabinet 15

2.6.5 Inserting the Chassis to the Cabinet 16

3 Backplane Introduction 18
4 Expander Board Introduction 20
5 Compatibility Lists 20
6 Q & A 21
7 Technical Support 22

PREFACE

Thank you for choosing the InWin IW-RS224-07. This manual is written for system technicians who are responsible for installation, troubleshooting, managing and repairing this server chassis. This document provides an overview of all the features of the chassis, a list of accessories or other components you may need to finish the installation, troubleshooting methods and instructions on adding and removing components in the InWin IW-RS224-07. For the latest version of this manual, you may visit InWin's server website.

SAFETY INFORMATION

To ensure a safe and smooth operation of your InWin IW-RS224-07, it is essential that you choose an appropriate location for the system, provide an appropriate operating environment and supply an adequate amount of power for all components of the system. As you plan for installation, follow the guidelines below to ensure that the system and its environment are safely and appropriately positioned for efficient operation and service. Your system should be installed and serviced only by a qualified technician.

Environment Selection: The system is designed to operate in a typical office environment:

- The location should be clean, dry and free of airborne particles.
- It should be placed in a well-ventilated room, and away from sources of heat including direct sunlight and radiators.
- It should be kept away from sources of vibration or physical shock.
- The space should be accommodated with a properly grounded wall outlet, and with sufficient space to access the power supply cords.
- The operating environment temperature should be around 0°C to 40°C (32°F to 104°F).

Heed Safety Instructions: Before working with InWin IPC/storage server products, we strongly recommend you use this guide as a reference and follow the safety instructions. The instructions in this manual will help you ensure and maintain compliance with existing product certifications and approvals. Follow the described, regulated components mentioned in this manual. Use of non-UL listing products or other regulators may not comply with product regulations in the region(s) in which the product is sold.

System Power On/Off: The power button DOES NOT totally turn off the system AC power. To remove the power of the system, you must unplug the AC power cord from the outlet or the system's power supply units. Make sure the power cord is unplugged before you open the chassis, add or remove any components.

Hazardous Conditions, Devices and Cables: Hazardous electrical conditions can be present on/in power supply units and their cables. Disconnect the power cord and any other devices attached to the server before opening the case. Failing to follow safety procedures will increase the risk of personal injury or equipment damage.

Electrostatic Discharge (ESD) and ESD Protection: In most cases, ESD may damage disk drives, electronic boards and other parts. We recommend that you conduct installation only at an ESD free space. If not possible, perform ESD protection protocol by wearing anti-static wrist straps attached to the ground on any unpainted metal surface on your server during operation.

Installing or Removing Jumpers: A jumper is a short length conductor used to close, open or bypass part of an electronic circuit. Jumpers on InWin backplanes have a small tab on top that you can pick up with your fingertips. Grip the jumper carefully and plug the jumper to cover the jumper pins on the backplane. Once you need to remove the jumper, grip the jumper and carefully pull without squeezing.

CAUTION

To avoid damage and maintain your safety, please read the following terms listed below:

1. Do not populate hard drives and turn on the power until the system has stabilized. Make sure hard drives and other components are properly connected before turning on the system.
2. Tighten or loosen all screws with a screwdriver.
3. Apply the correct screws packed in the accessories box.
4. For your safety, please have at least two people lift and install the unit in its designated area.
5. Before mounting the unit to the cabinet, make sure the rail is installed correctly.
6. When installing and removing any module or part, please use the handles.

SPECIFICATIONS

Model Name	RS224-07
Industry Standard	EIA-RS310D
M/B Form Factor	ATX (12" x 9.6"), CEB (12" x 10.5"), EEB (12" x 13")
Drive Bay	• External 2.5" screwless hot-swap SSD trays x 24 (Optional: NVMe trays x 8, supports U.2 NVMe SSD) • Rear 2.5" screwless hot-swap SSD trays x 2 (Supports SAS 12G)
Power Supply	Supports: • Form factor: 80 PLUS Platinum CRPS • Watt: 550W/800W/1200W
Indicator	Power LED, LAN1/LAN2/LAN3/LAN4 LED, System LED, ID LED, HDD LED
Front Control Panel	Power on/off, Reset, NMI, ID SW, USB 3.0 x 2
Backplane-1	Mini-SAS HD (SFF-8643), 12Gb/s with expander plus Slimline x 8
Backplane-2	Mini-SAS HD (SFF-8643), 12Gb/s with expander plus Oculink x 8
SAS 12G Expander	Supports Broadcom SAS 35 x 36R expander
Cooling Fan	80 x 38mm PWM hot-swap fans x 4, 12000RPM
Expansion Slot	Low-profile PCIe slots x 7
Material	• Material: SGCC • Thickness: 1.0mm
Rail Kit	Optional: supports 28" tool-less & ball-bearing slide rails
Product Dimensions (D x W x H; Chassis Only)	660 x 448 x 87.5mm (26" x 17.6" x 3.4")
Packaging Dimensions (D x W x H)	845 x 595 x 223mm
Weight (Chassis Only)	• Net weight: 13.45kg • Gross weight: 16.76kg
Cubic Feet	3.96
Container Information	Single packing with pallets: • 20': 160pcs • 40': 368pcs • 40' HQ: 414pcs

∗ The actual product is subject to change without prior notice. InWin Development Inc. reserves the right to make any final modifications.

∗ The adjacent image is for reference only. All hardware components and optional parts are not included.

Product Dimensions

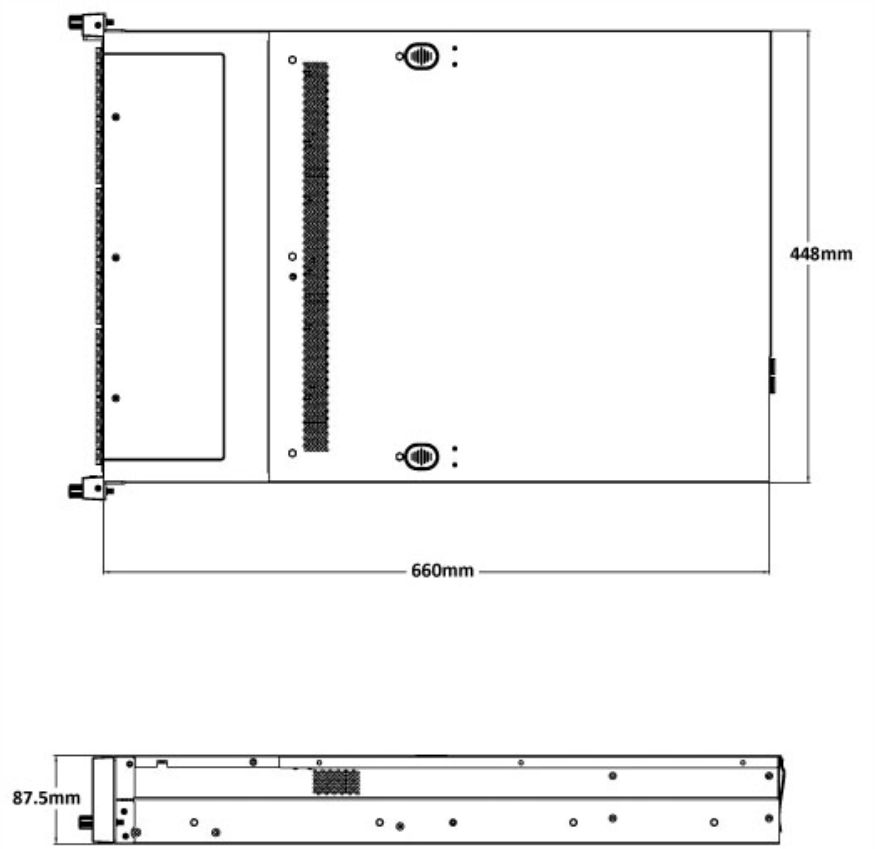

12Gb/s BACKPLANE SPECIFICATIONS

Backplane-1	Slimline Backplane
Dimensions (W x H)	420mm x 81mm
Backplane Type	Active with expander board
Host Interface	3 x SFF-8643, 8 x SFF-8654 Slimline
HDD Interface	24 x SAS/SATA or 16 x SAS/SATA & 8 x NVMe SSD

Backplane-2	Oculink Backplane
Dimensions (W x H)	420mm x 81mm
Backplane Type	Active with expander board
Host Interface	3 x SFF-8643, 8 x SFF-8611 Oculink
HDD Interface	24 x SAS/SATA or 16 x SAS/SATA & 8 x NVMe SSD

1 Product Introduction

1.1 Box Contents

When you open the IW-RS224-07 box, the contents should include following:

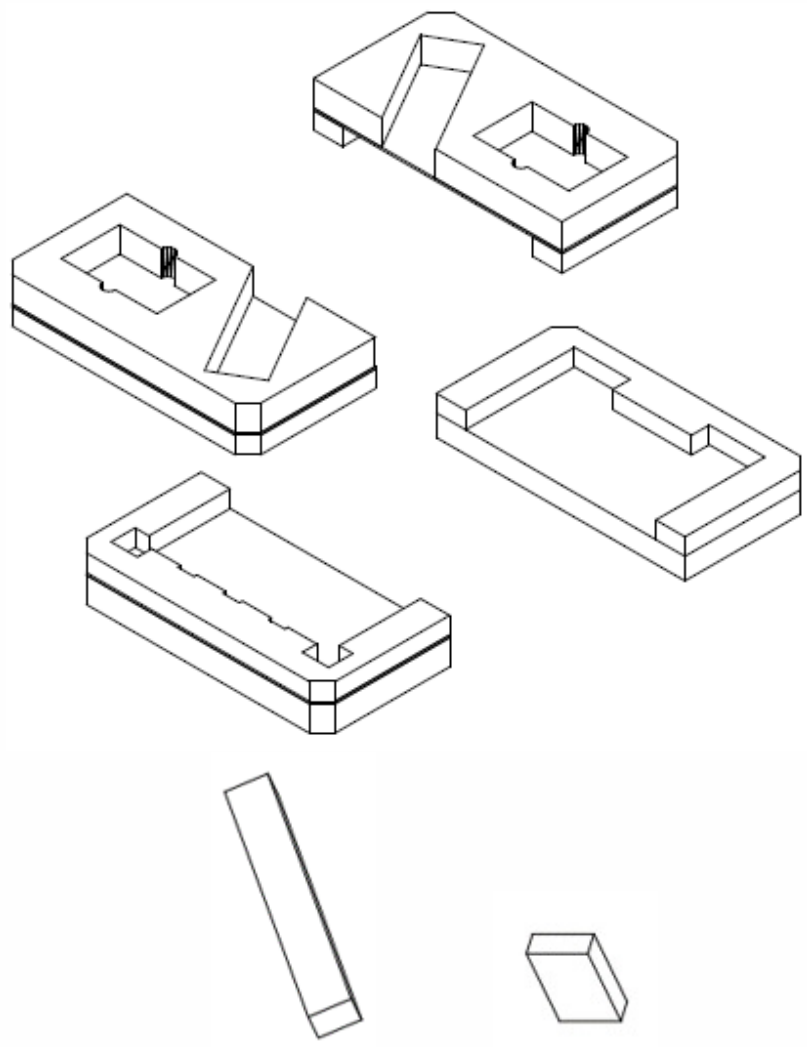

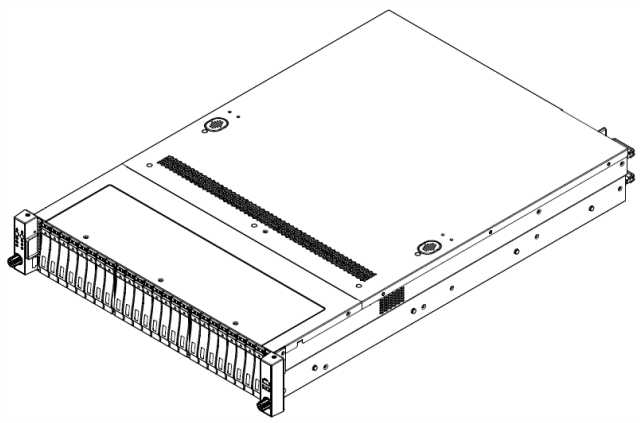

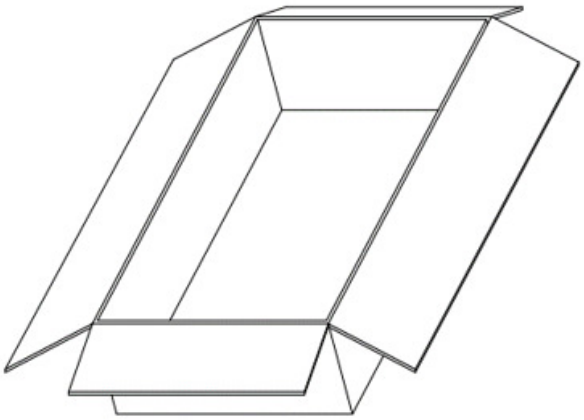

1.2 Accessories Box

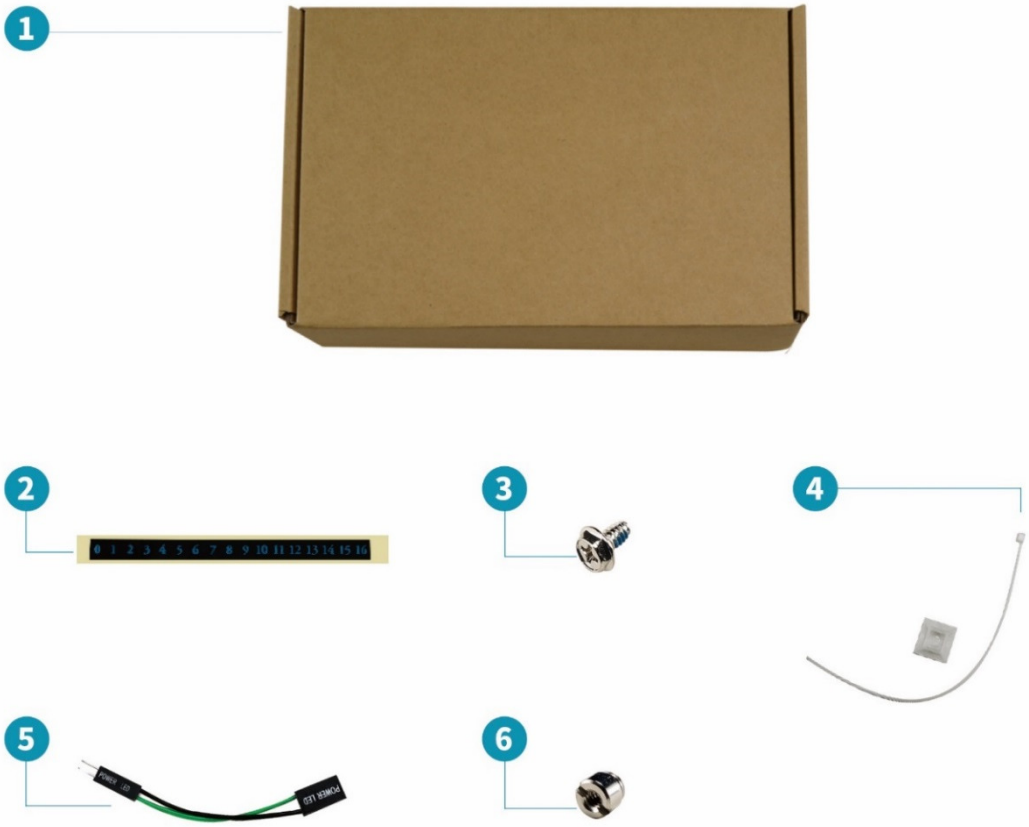

No.	Name	No.	Name
1	Accessories Box	4	Cable Ties and Mounts x 5
2	Label x 1	5	Power LED 3-pin to 2-pin Adapter x 1
3	Hexagon Head Screws x 12	6	Motherboard Stand-off Sockets x 12

1.3 General Information

When you open the chassis, it should reflect the diagram's image.

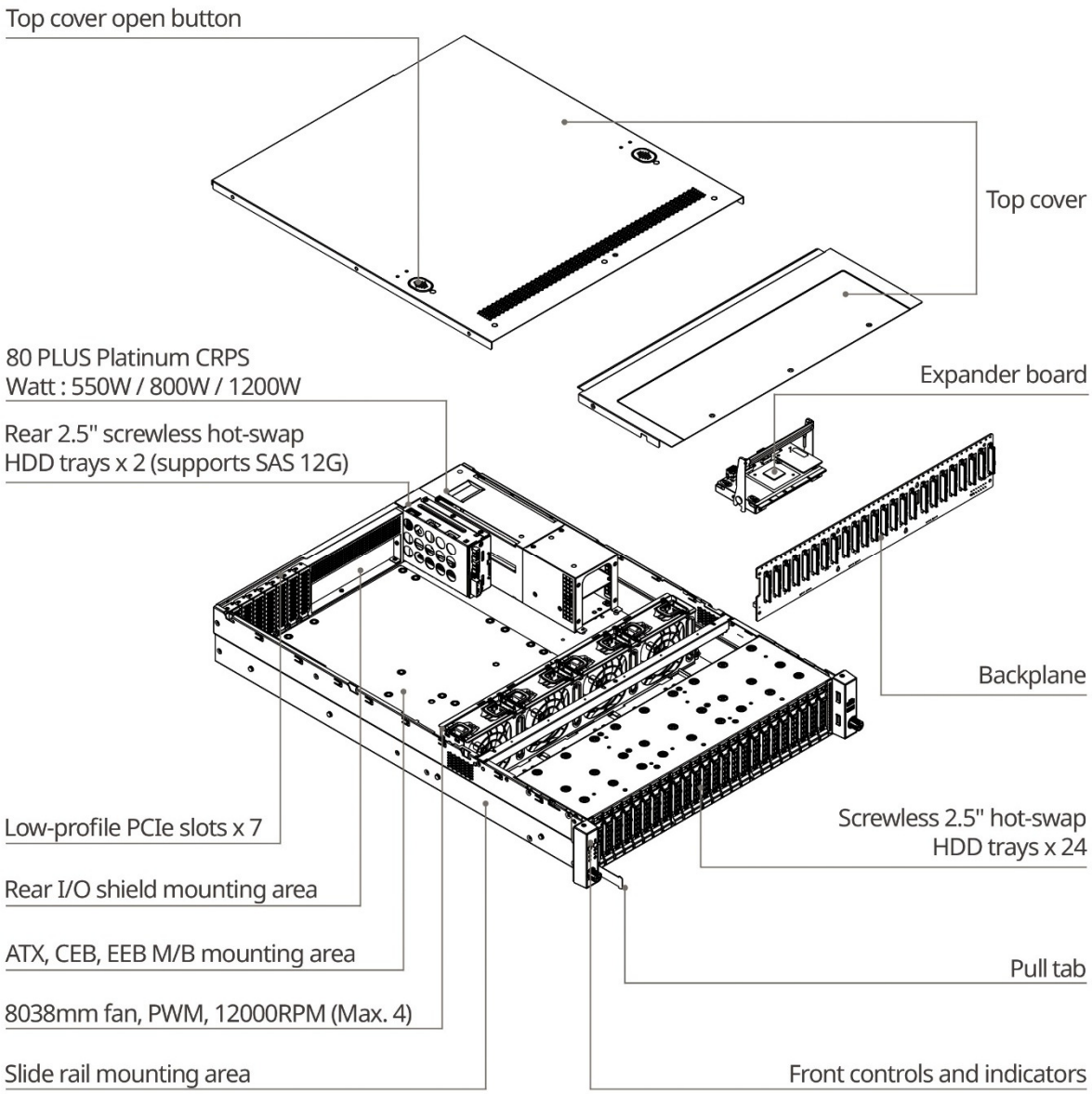

1.3.1 Front Panel Controls and Indicators

The IW-RS224-07 supports either 2.5" SAS/SATA disk bays x 24 or 2.5" SAS/SATA disk bays x 16 + 2.5" NVMe disk bays x 8 in specific areas. The control panel, USB I/O ports and indicators are located on the handles.

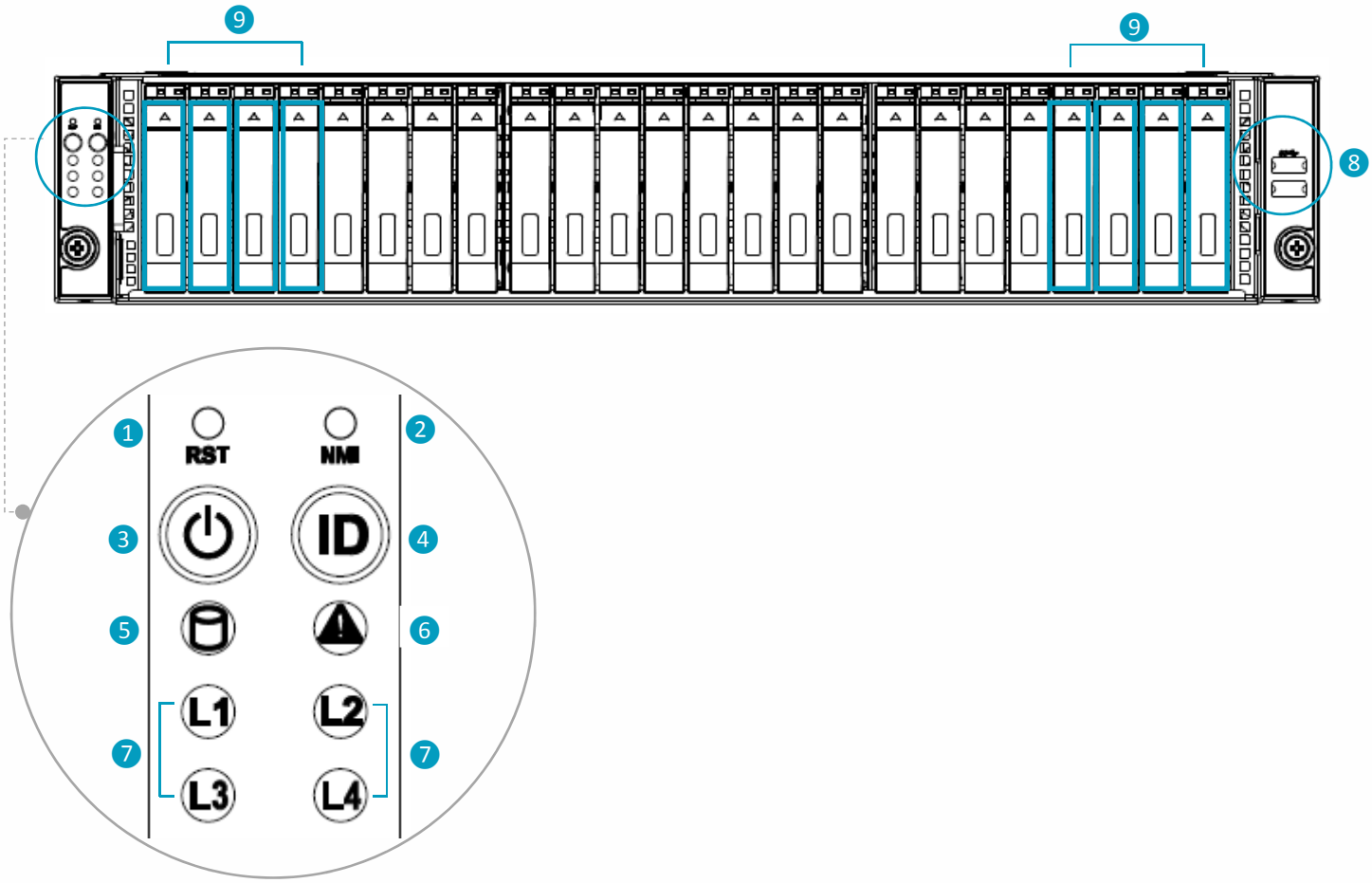

No.	Name	Color	Status	Description
1	System Reset Button	N/A		Press the button to activate system reset.
2	NMI Button	N/A		Press the button to activate user-defined function.
3	Power On/Off Button with LED	Green	Solid on	System is powered on.
		N/A	Off	System is off.
4	Chassis ID Button with LED	Blue	Solid on	Press the button to activate system identification.
5	Hard Disk LED	Amber	Blinking	System HDD accessing.
6	System Fail LED	Amber	Solid on	System Status (- , +).
		Green	Solid on	System Status (+ , -).
7	LAN LED (From top to bottom ranked LAN1-LAN4)	Green	Blinking	Link between system and network.
		N/A	Off	No data transmission or receiving is occurring.
8	USB 3.0 Connector	N/A		USB devices connections.
9	NVMe 8 x 2.5" disk bays for faster hybrid storage performance.			

1.3.2 Rear Panel Configuration

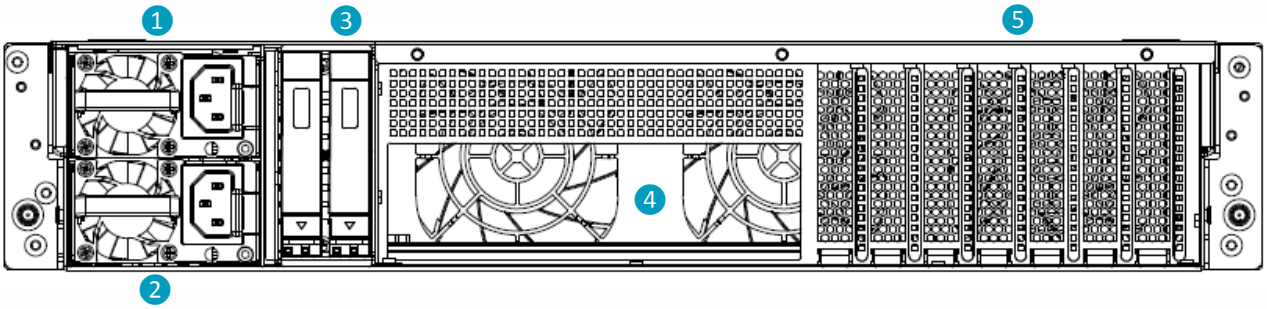

No.	Name	Description
1	Power Module 1	Default primary power supply module
2	Power Module 2	Backup power supply module
3	OS HDD	This slot is for InWin OS disk backup module (optional), which supports two 2.5" 12G SSDs and features hot-swap function.
4	System I/O (Depends on M/B Specifications)	The I/O shield should come with the motherboard or is provided by motherboard vendors.
5	7 Low Profile PCIe Slots	The slots support low profile cards. The bracket should be removed before using.

2 Hardware Installation

2.1 Motherboard & Expansion Card Installation

Before installing the motherboard, please find the I/O shield from your motherboard package and install it into the system I/O window. If you cannot find the I/O shield, please check with your motherboard vendor, or contact InWin for I/O shield OEM service.

For a quick installation video, please visit 07 Series Motherboard & Expansion Card.

2.2 HDD Tray Installation

The IW-RS224-07 features tool-less trays. Users no longer need to use screws to mount disks, and can swap drives faster.

For a quick installation video, please visit 07 Series HDD Tray Installation.

2.3 Fan Installation

The IW-RS224-07's built-in fan modules feature a tool-less design, which makes it easy to maintain.

For a quick installation video, please visit 07 Series Fan Installation.

2.4 Power Supply Installation

The IW-RS224-07 has a built-in redundant power supply unit. With this function, the system is capable of operating if one of the modules fails. To replace it, users only need to release the failed module, and then insert a functional module.

For a quick installation video, please visit 07 Series Power Supply Installation.

2.4.1 Power Supply Cable Information

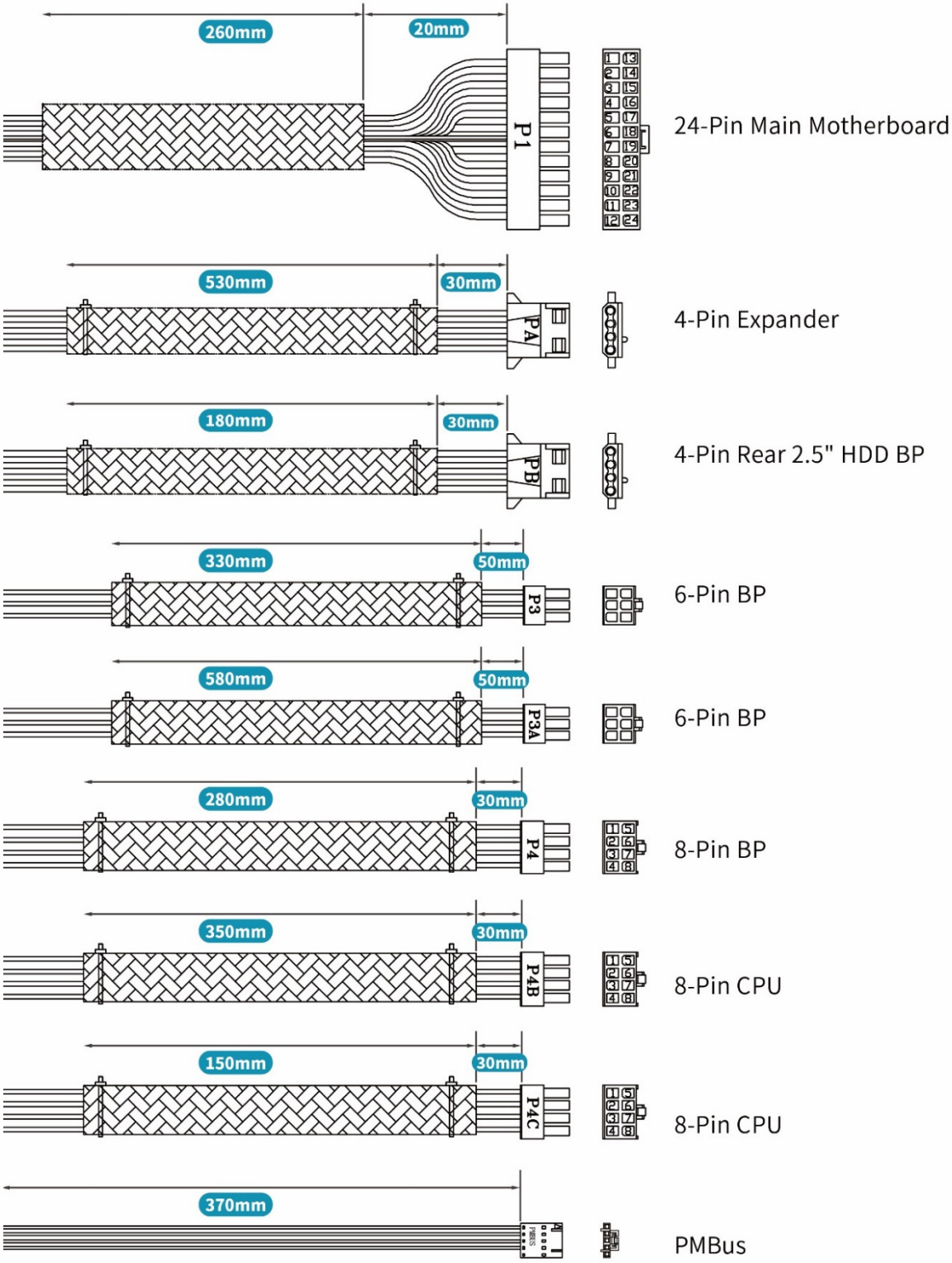

Length Unit: mm

2.5 Connecting Cables

InWin backplanes with expander board are high performance and are cost-effective solutions for supporting Intel® Xeon Scalable & AMD EPYC family by adding NVMe support. The active backplanes support state-of-the-art SAS3 12Gbps HDD/SSD and are also backward compatible with SAS 6Gbps, SATA 6Gps and SATA 3Gps HDD/SSD. Some of the backplanes support NVMe SSDs through either Oculink x 8 or Slimline x 8 connectors.

2.5.1 Connecting Expander Through SAS Connectors

Use the SAS 8643 cable to connect the expander to the motherboard.

Use ports 1 and 2 to connect the motherboard or RAID controller, and port 3 for cascading.

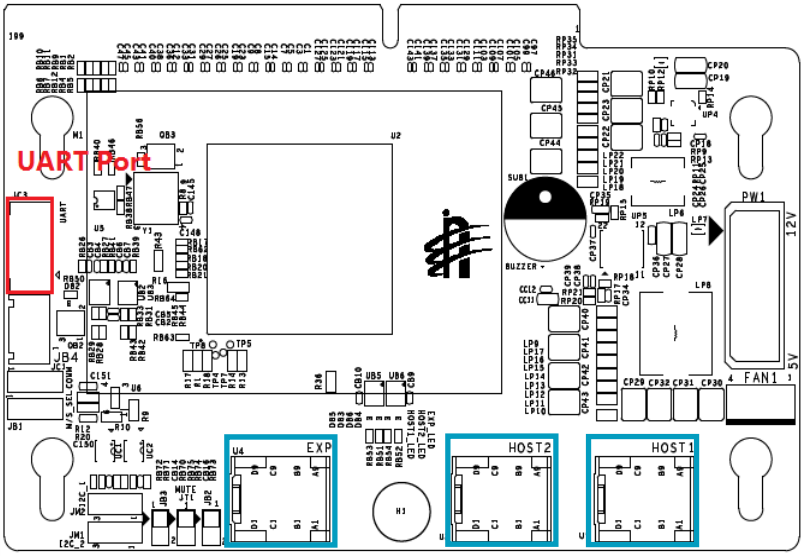

SAS Connectors

2.5.2 Connecting LED Cable, Front Control Panel and Front USB I/O Ports

Refer to your motherboard user guide for pin functions and locations, and then plug the connectors to the pins on the motherboard to activate the functions.

USB 3.0

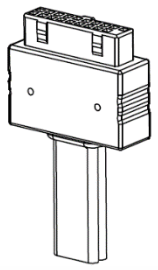

LED Connector

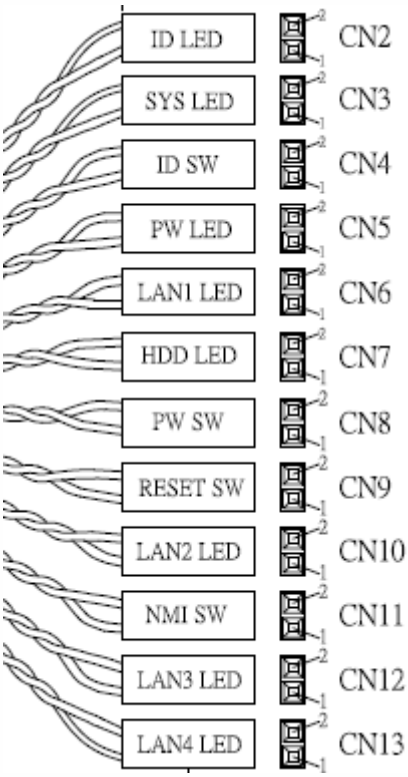

No.	Connector Name	Abbreviation	Color	Front I/O Indication
CN2	ID LED	ID LED	RED/**BLACK**	Chassis ID Button with LED
CN3	SYSTEM LED	SYS LED	RED/**BLACK**	System Fail LED
CN4	ID Switch	ID SW	RED/**BLACK**	Chassis ID Button with LED
CN5	Power LED	PW LED	RED/**BLACK**	Power ON/OFF Button with LED
CN6	LAN 1 LED	LAN1 LED	RED/**BLACK**	LAN LED
CN7	HDD LED	HDD LED	RED/**BLACK**	HDD Active LED
CN8	Power Switch	PW SW	RED/**BLACK**	Power ON/OFF Button with LED
CN9	Reset Switch	RESET SW	RED/**BLACK**	System Reset Button
CN10	LAN 2 LED	LAN2 LED	RED/**BLACK**	LAN LED
CN11	NMI Switch	NMI SW	RED/**BLACK**	NMI Button
CN12	LAN 3 LED	LAN3 LED	RED/**BLACK**	LAN LED
CN13	LAN 4 LED	LAN4 LED	RED/**BLACK**	LAN LED
	USB 3.0 Connector	None	-	USB 3.0

※ *If the motherboard's led power source is a 3-pin type, please use the 2-Pin to 3-Pin convertor adapter from the accessories box to connect.*

2.6 Installing the Slide Rail

The IW-RS224-07 is a rackmount model, which supports EIA-RS310D standard cabinets and chassis racks. InWin provides standard slide rails to allow users to mount the chassis onto the cabinets.

2.6.1 Identifying the Slide Rail

The slide rail by your order might be different. You can reference the quick installation guide inside the slide rail package and follow the instructions to mount the rail onto your cabinet or chassis rack.

2.6.2 Removing the Inner Rail and Sliding the Intermediate Rail Back.

Step 1: Pull out the inner rail until it reaches the stop. Release the blue slide tab to unlock.

Step 2: Continue pulling the inner rail until the second stops. Release the white slide tab to remove the inner rail.

Step 3: Pull the latch on the middle rail upward and retract the middle rail back.

Step 1 - 2

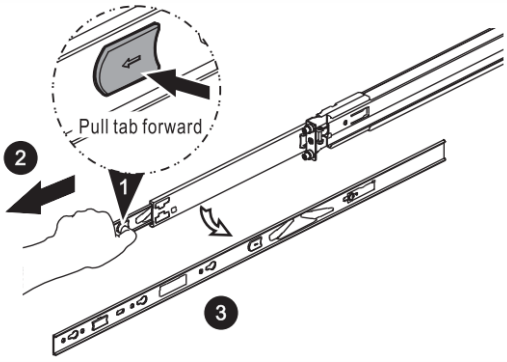

Step 3

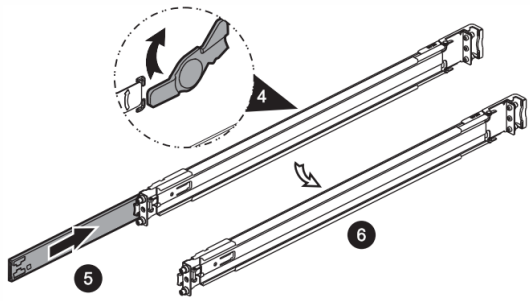

2.6.3 Attaching the Inner Rail to the Chassis

Step 1: Align the chassis sidewall standoffs to the inner rail keyholes. Slide the inner rail toward the front until the standoffs snap into place, securing the rail to the chassis.

Step 2: Repeat the same action on the other side.

Step 3: When removing the inner rail:

Pull up the latch and slide the inner rail forward. Remove the keyhole from the standoff to detach the inner rail. (Action ❶ and ❷ in the figure)

Step 1 - 2

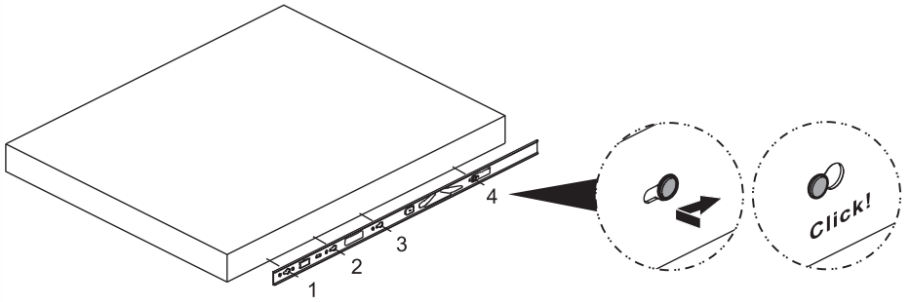

Step 3

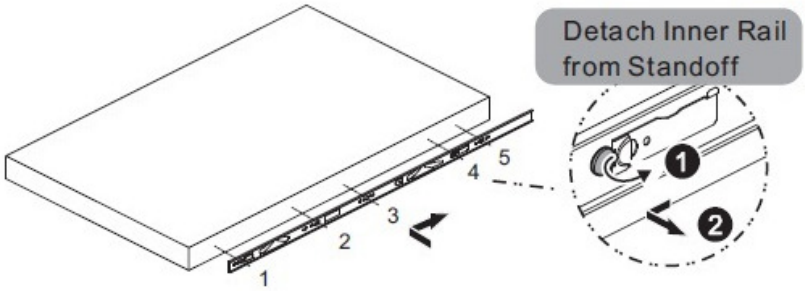

2.6.4 Mounting the Rail Bracket to the Cabinet

Step 1: Extend the rail bracket over the rear rack of the cabinet.
Step 2: Pull out the rear hook on the end of the outer rail, align and push the rail bracket pins into the post holes on the rack. Then, pull back the hook on the end of the outer rail.
Step 3: Extend the opposite side of the rail bracket to the front rack of the cabinet.
Step 4: Hang the front hooks of the outer rail at the front of the rack post holes. Pull the rail bracket pins that go into the front post holes on the rack until they click.
Step 5: The other side is the same process. Repeat the installation steps 1-4.
Step 6: Once you would like to detach the bracket, pull outward on the front and the rear hooks of the outer rail to release the bracket. Repeat the same action to the other side.

Step 1 - 5

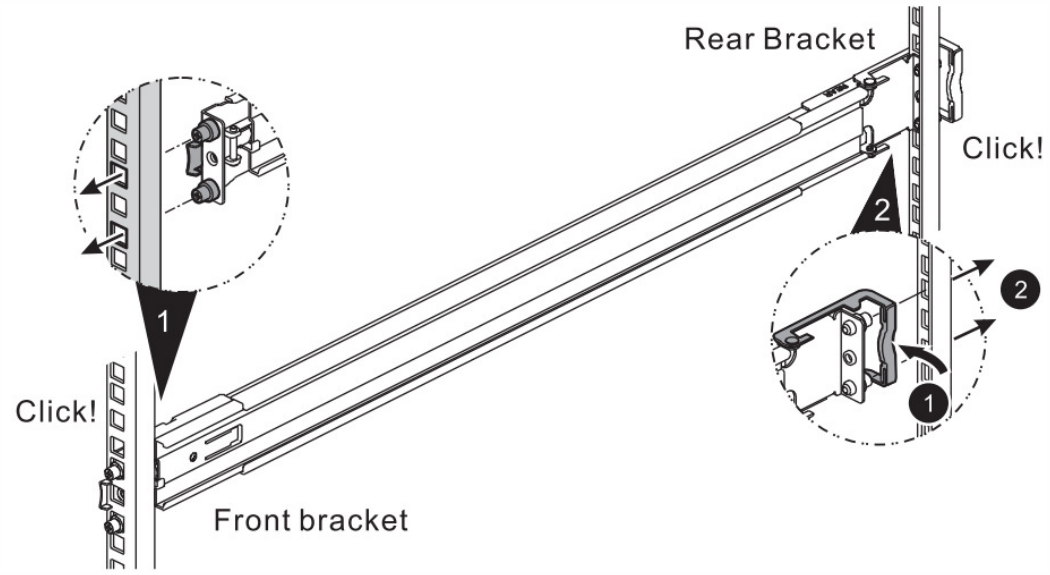

Step 6

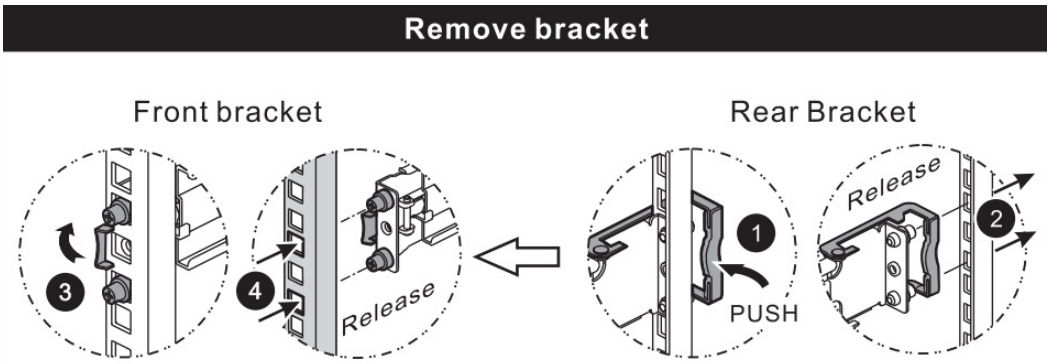

2.6.5 Inserting the Chassis to the Cabinet

Step 1: Pull out the middle rail to the stop position.
Step 2: Move the ball bearing retainer to the front end of the middle rail, and it should click into the locked position.
Step 3: Insert the inner rails of the chassis into the middle rails on both sides of the rack.
Step 4: Push the chassis to the stop position, and then release the blue slide tab (by either pulling the tab forward or pushing the tab back) to continue.
Step 5: Until reaching the second stop position, release the blue slide tab again to continue.
Step 6: Push the chassis into position on the rack completely. Make sure that the front end of the chassis is aligned with the edge of the rack to complete the installation.

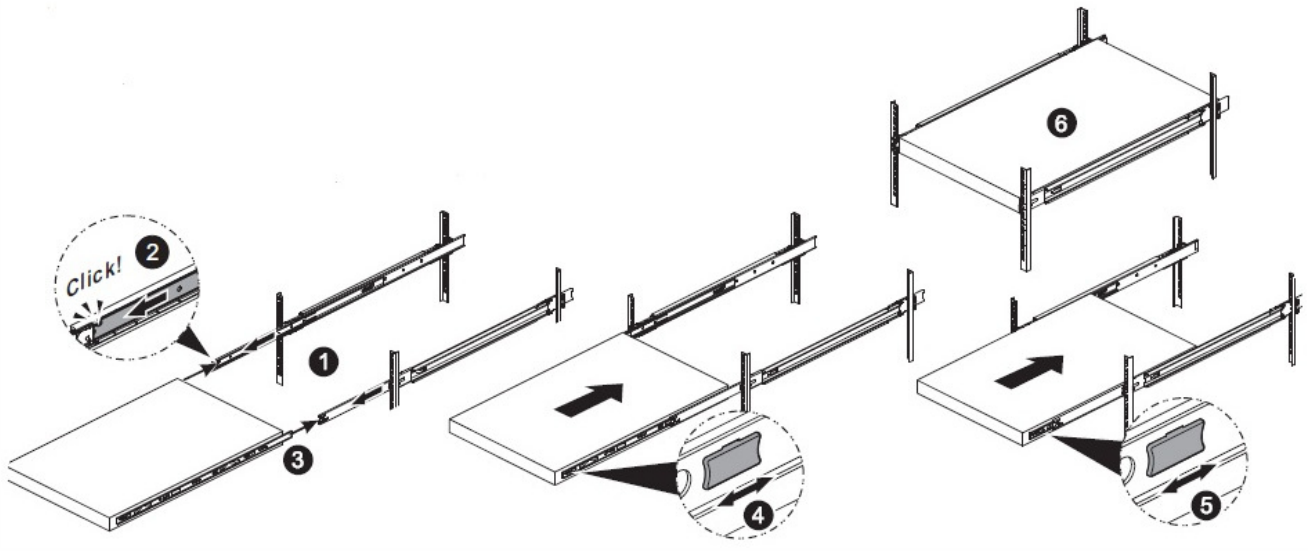
Click!
2
1
3
4
5
6

3 Backplane Introduction

The backplane varies by order. Please reference the backplane user guide to complete the installation. The download link is at the download section of each product. Please visit the InWin website: ipc.in-win.com.

Oculink Backplane for NVMe

Top Side

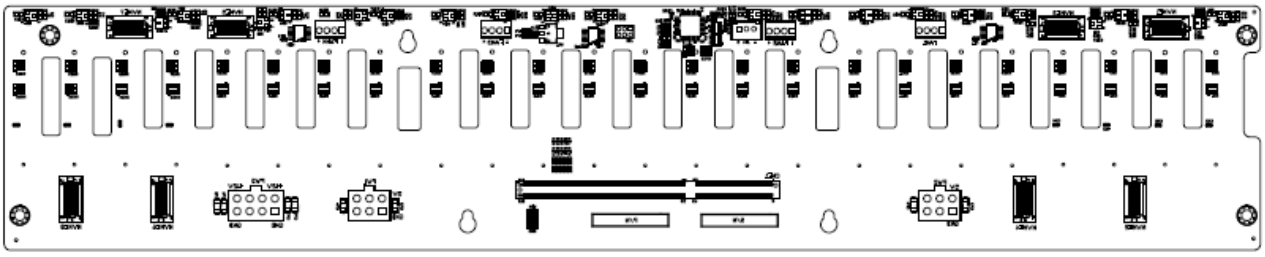

Bottom Side

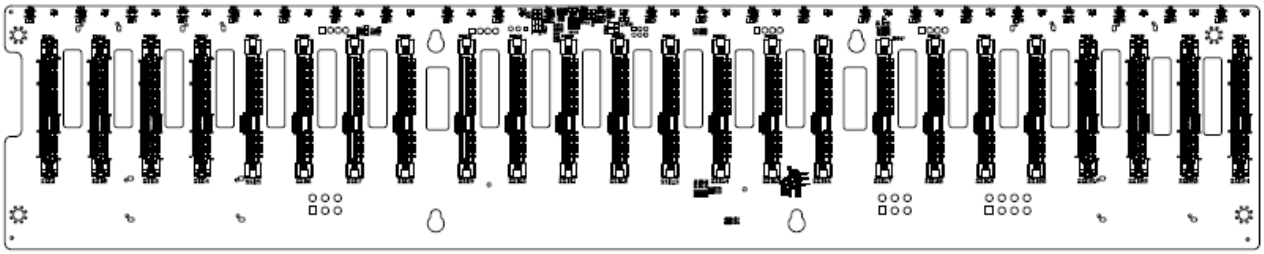

Slimline Backplane for NVMe

Top Side

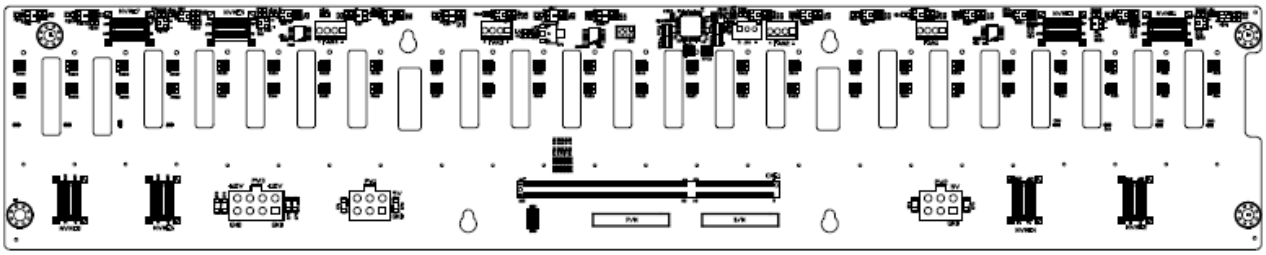

Bottom Side

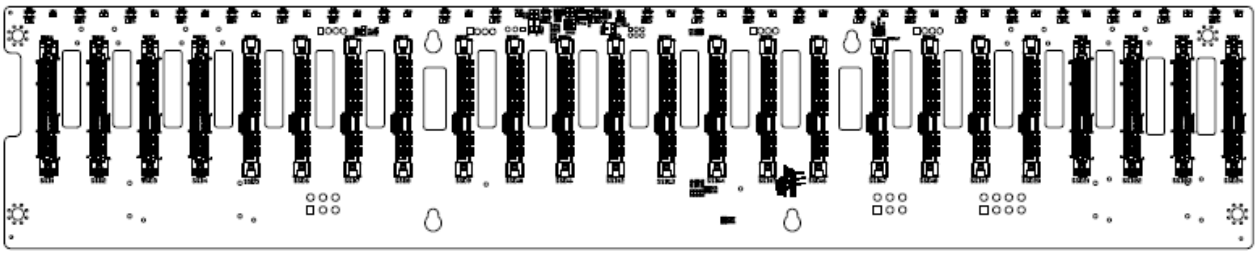

Location	Print	Description
JD1	ICE1	For MCU FW Programming
JD2	ICE2	For MCU FW Programming
S1	MODE_SEL	VPP over 12C Protocol Selection (for future use)
S2	MODE_SEL	VPP over 12C Protocol Selection (for future use)

Rear 2.5" HDD BP

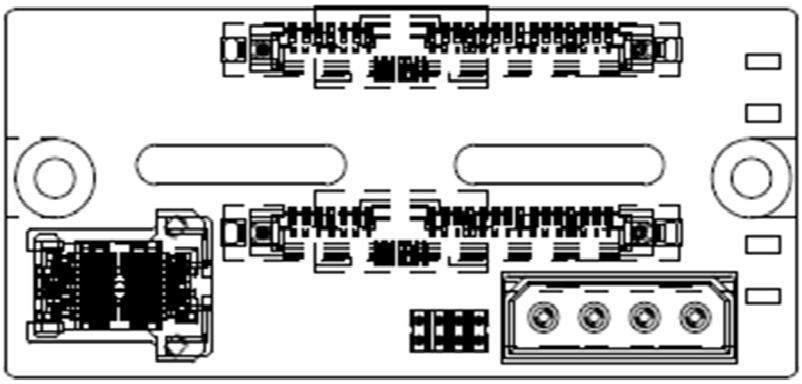

4 Expander Board Introduction

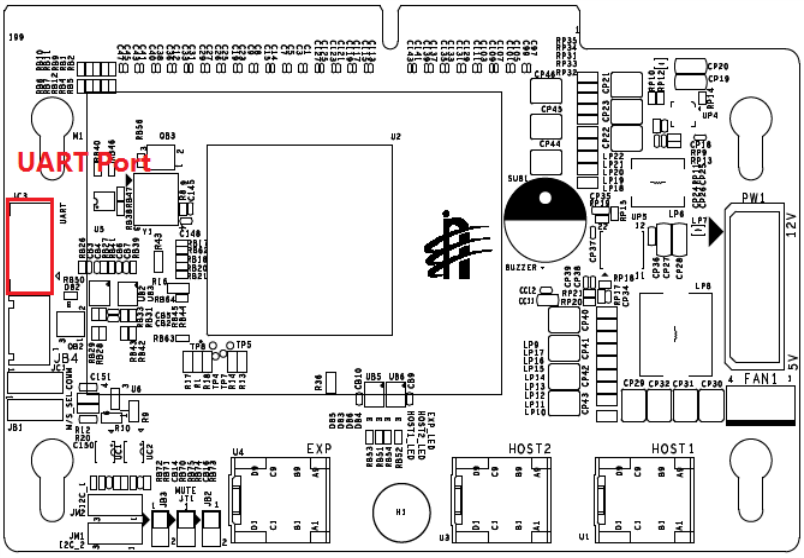

Location	Print	Description
JB1	M/S SEL	For future use
JB2	MUTE_BUTTON	Button for muting alarm
JB3	SYS_ERR_LED	LED indicator for fan fails or system overheats.
JB4	MB_FAN	For connecting to motherboard fan connector
JT1	TEST	For testing purposes
JM1	I2C_1	For future use
JM2	I2C_2	For future use
JC1	COMM	For future use
JC3	DBG/UART	Use for firmware upgrade and debugging purposes

5 Compatibility Lists

To reach the best performance and avoid system failure, InWin strongly recommends customers to choose the components from InWin's compatibility list. All the components are tested in InWin's lab, and assured the components are compatible with InWin's chassis. You can download the latest updated device compatibility list from InWin's website: ipc.in-win.com.

6 Q & A

a. What is the function of the backplane?

A: The backplane is the bridge which connects the hard drives and exports the signal to the motherboard. Also, the backplane provides the LED signals indicating the status of the hard drives, and alarming when the system temperature is abnormal.

b. Does the backplane support 6Gb SAS?

A: The InWin IW-RS224-07 is accommodated with 12Gb SAS backplane by default. The 12Gb SAS connector interface (SFF-8643) is not compatible with 6Gb SAS. InWin provides OEM/ODM services, so customers may contact their local InWin sales reps for customization.

c. Does the chassis support 3.5", 2.5", SAS and SATA drives? Can I mix the different types of drives in an enclosure?

A: The InWin IW-RS224-07 supports 2.5" (15mm) form factor's SAS/SATA disks. Yet, to reach the best performance, we recommend following the motherboard or RAID controller vendors' instructions.

d. Does the chassis support SSDs or flash NVMe drives?

A: SAS/SATA and NVMe SSD connections can be attached to the InWin IW-RS224-07. We recommend customers reference InWin's compatibility list to confirm if your SSDs are listed, or please contact InWin's sales reps for better reference.

e. Does the chassis support mirrored OS disks?

A: The InWin IW-RS224-07 models support two-bay 2.5" hot-swap modules. Yet, the disk mirroring is defined by your motherboard or your RAID 1 controller card. Check the vendor's guide to mirror your OS disks.

f. Can it support small form factor motherboards such as M-ATX and Mini-ITX?

A: The InWin IW-RS224-07 supports motherboards that range from Mini-ITX to EEB. Unless you would like to mount a customized motherboard, which will not meet Intel's standard, you will need to contact InWin's partners or sales reps for customization services.

g. Do I need a RAID controller card to connect the backplane?

A: If you would like to construct a solid hardware RAID system, it is required. However, whether you should use the RAID controller card or not depends on your purpose and budget. We recommend discussing with InWin's channel partners for their suggestions.

h. Where can I buy the SAS cable?

A: The 12Gb SAS to 4 SATA or 12Gb SAS to 6Gb SAS are standard cables that you can easily buy from many vendors. You can buy the verified cable from InWin to eliminate compatibility issues.

7 Technical Support

If you need help with installation or troubleshooting, you can contact your local InWin reps, or send an e-mail to InWin's local contacts for technical assistance.