IW-RS104-07

User Manual

Table of Contents

PREFACE 1
SAFETY INFORMATION 1
CAUTION 2
SPECIFICATIONS 3
12Gb/s BACKPLANE SPECIFICATIONS 5
1 Product Introduction 6
1.1 Box Contents 6
1.2 Accessories Box 7
1.3 General Information 8
1.3.1 Front Panel Controls and Indicators 9
1.3.2 Rear Panel Configuration 10
2 Hardware Installation 11
2.1 Motherboard & Expansion Card Installation 11
2.2 HDD Tray Installation 11
2.3 Fan Installation 11
2.4 Power Supply Installation 11
2.4.1 Power Supply Cable Information 11
2.5 Internal HDD Installation 14
2.6 Connecting Cables 14
2.6.1 Connecting Backplane Through SAS Connectors 14
2.6.2 Connecting LED Cable, Front Control Panel and Front USB I/O Ports 14
2.7 Installing the Slide Rail 15
2.7.1 Identifying the Slide Rail 15
2.7.2 Installing the Slide Rail 15
2.7.3 Mounting the chassis onto the cabinet 16

3 Backplane Introduction 18
4 Compatibility Lists 19
5 Q & A 20
6 Technical Support 21

PREFACE

Thank you for choosing the InWin IW-RS104-07. This manual is written for system technicians who are responsible for installation, troubleshooting, managing and repairing this server chassis. This document provides an overview of all the features of the chassis, a list of accessories or other components you may need to finish the installation, troubleshooting methods and instructions on adding and removing components in the InWin IW-RS104-07. For the latest version of this manual, you may visit InWin's server website.

SAFETY INFORMATION

To ensure a safe and smooth operation of your InWin IW-RS104-07, it is essential that you choose an appropriate location for the system, provide an appropriate operating environment and supply an adequate amount of power for all components of the system. As you plan for installation, follow the guidelines below to ensure that the system and its environment are safely and appropriately positioned for efficient operation and service. Your system should be installed and serviced only by a qualified technician.

Environment Selection: The system is designed to operate in a typical office environment:

- The location should be clean, dry and free of airborne particles.
- It should be placed in a well-ventilated room, and away from sources of heat including direct sunlight and radiators.
- It should be kept away from sources of vibration or physical shock.
- The space should be accommodated with a properly grounded wall outlet, and with sufficient space to access the power supply cords.
- The operating environment temperature should be around 0°C to 40°C (32°F to 104°F).

Heed Safety Instructions: Before working with InWin IPC/storage server products, we strongly recommend you use this guide as a reference and follow the safety instructions. The instructions in this manual will help you ensure and maintain compliance with existing product certifications and approvals. Follow the described, regulated components mentioned in this manual. Use of non-UL listing products or other regulators may not comply with product regulations in the region(s) in which the product is sold.

System Power On/Off: The power button DOES NOT totally turn off the system AC power. To remove the power of the system, you must unplug the AC power cord from the outlet or the system's power supply units. Make sure the power cord is unplugged before you open the chassis, add or remove any components.

Hazardous Conditions, Devices and Cables: Hazardous electrical conditions can be present on/in power supply units and their cables. Disconnect the power cord and any other devices attached to the server before opening the case. Failing to follow safety procedures will increase the risk of personal injury or equipment damage.

Electrostatic Discharge (ESD) and ESD Protection: In most cases, ESD may damage disk drives, electronic boards and other parts. We recommend that you conduct installation only at an ESD free space. If not possible, perform ESD protection protocol by wearing anti-static wrist straps attached to the ground on any unpainted metal surface on your server during operation.

Installing or Removing Jumpers: A jumper is a short length conductor used to close, open or bypass part of an electronic circuit. Jumpers on InWin backplanes have a small tab on top that you can pick up with your fingertips. Grip the jumper carefully and plug the jumper to cover the jumper pins on the backplane. Once you need to remove the jumper, grip the jumper and carefully pull without squeezing.

CAUTION

To avoid damage and maintain your safety, please read the following terms listed below:

1. Do not populate hard drives and turn on the power until the system has stabilized. Make sure hard drives and other components are properly connected before turning on the system.
2. Tighten or loosen all screws with a screwdriver.
3. Apply the correct screws packed in the accessories box.
4. For your safety, please have at least two people lift and install the unit in its designated area.
5. Before mounting the unit to the cabinet, make sure the rail is installed correctly.
6. When installing and removing any module or part, please use the handles.

SPECIFICATIONS

Model Name	RS104-07
Industry Standard	EIA-RS310D
M/B Form Factor	ATX (12" x 9.6"), CEB (12" x 10.5"), EEB (12" x 13")
Drive Bay	• External: Supports slim ODD x 1 Supports 2.5"/3.5" screwless hot-swap SSD trays x 4 • Internal: 2.5" x 2 or x 3 (via slim ODD conversion tray)
Power Supply	Supports: • 750W 1U 1 + 1 redundant PSU, 80 Plus Platinum • 650W 1U single PSU, 80 Plus Gold
Indicator	Power LED, LAN1/LAN2/LAN3/LAN4 LED, System LED, HDD LED, ID LED
Front Control Panel	Power on/off, Reset, NMI, ID SW, USB 3.0 x 2
Backplane-1	• Host: Slimline (internal SFF-8654 x 4, for PCIe protocol) + 8643 x 1 for SAS protocol • HDD: 8639 x 4 (for NVMe/SAS/SATA device)
Backplane-2	• Host: Oculink (internal SFF-8611 x 4 for PCIe protocol) + 8643 x 1 for SAS protocol • HDD: 8639 x 4 (for NVMe/SAS/SATA device)
Backplane-3	• Host: 8643 x 1 for SAS/SATA protocol • HDD: SAS/SATA compatible connectors x 4
Cooling Fan	40 x 56mm PWM easy-swap fans x 6, 21500RPM modular design with anti-vibration
Expansion Slot	Full-height PCIe slot x 1 (via riser card)
Material	• Material: SGCC • Thickness: 1.0mm
Rail Kit	Supports 28" tool-less & ball-bearing slide rails
Product Dimensions (D x W x H; Chassis Only)	676.6 x 438 x 43.4mm (26.6" x 17.2" x 1.7")
Packaging Dimensions (D x W x H)	820 x 590 x 175mm
Weight (Chassis Only)	• Net weight: 7.74kg • Gross weight: 10.53kg
Cubic Feet	2.99
Container Information	Single packing with pallets: • 20': 200pcs • 40': 460pcs • 40' HQ: 552pcs

- ∗ The actual product is subject to change without prior notice. InWin Development Inc. reserves the right to make any final modifications.
- ∗ The adjacent image is for reference only. All hardware components and optional parts are not included.

Product Dimensions

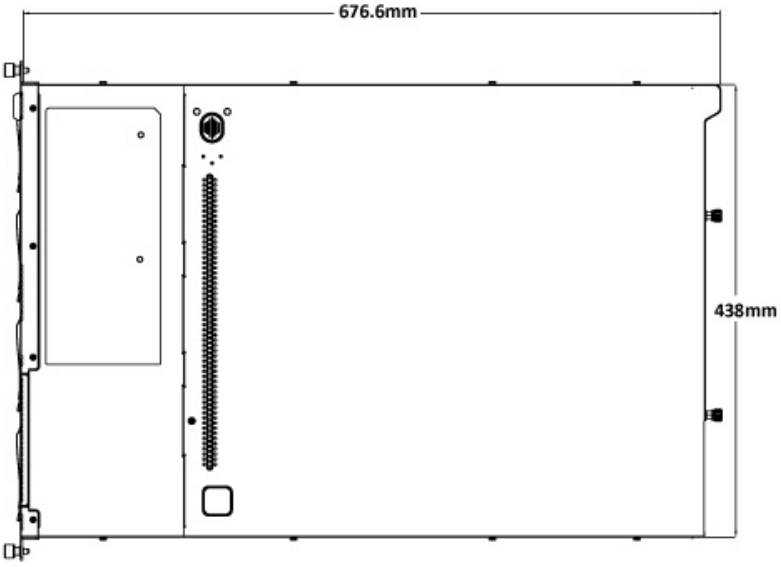

12Gb/s BACKPLANE SPECIFICATIONS

Backplane-1	Slimline Backplane
Dimensions (W x H)	416.6mm x 33mm
Backplane Type	Passive
Host Interface	Slimline (internal SFF-8654 x 4, for PCIe protocol) + 8643 x 1 for SAS protocol
HDD Interface	8639 x 4 (for NVMe/SAS/SATA device)

Backplane-2	Oculink Backplane
Dimensions (W x H)	416.6mm x 33mm
Backplane Type	Passive
Host Interface	Oculink (internal SFF-8611 x 4, for PCIe protocol) + 8643 x 1 for SAS protocol
HDD Interface	8639 x 4 (for NVMe/SAS/SATA device)

Backplane-3	SAS/SATA Backplane
Dimensions (W x H)	416.6mm x 33mm
Backplane Type	Passive
Host Interface	8643 x 1 for SAS/SATA protocol
HDD Interface	SAS/SATA compatible connector x 4

1 Product Introduction

1.1 Box Contents

When you open the IW-RS104-07 box, the contents should include following:

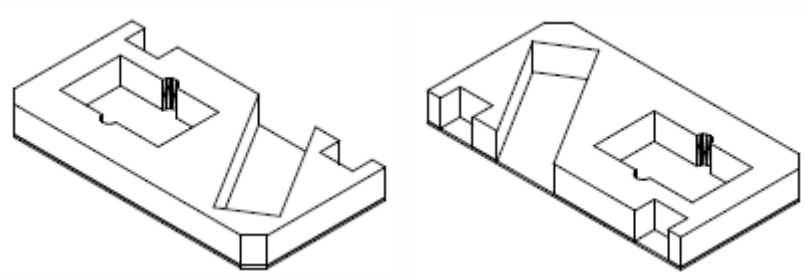

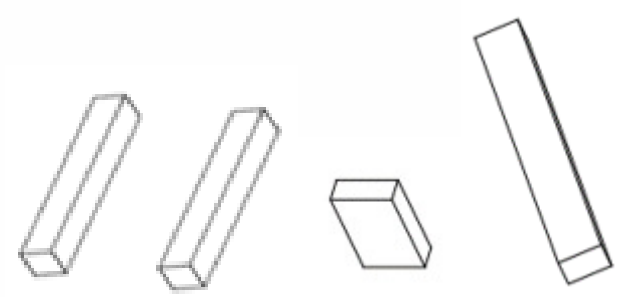

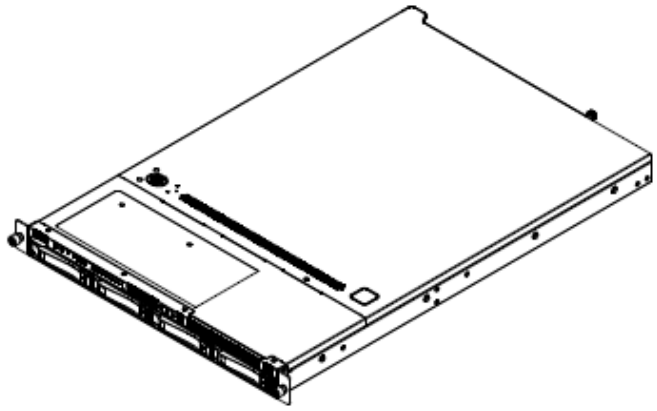

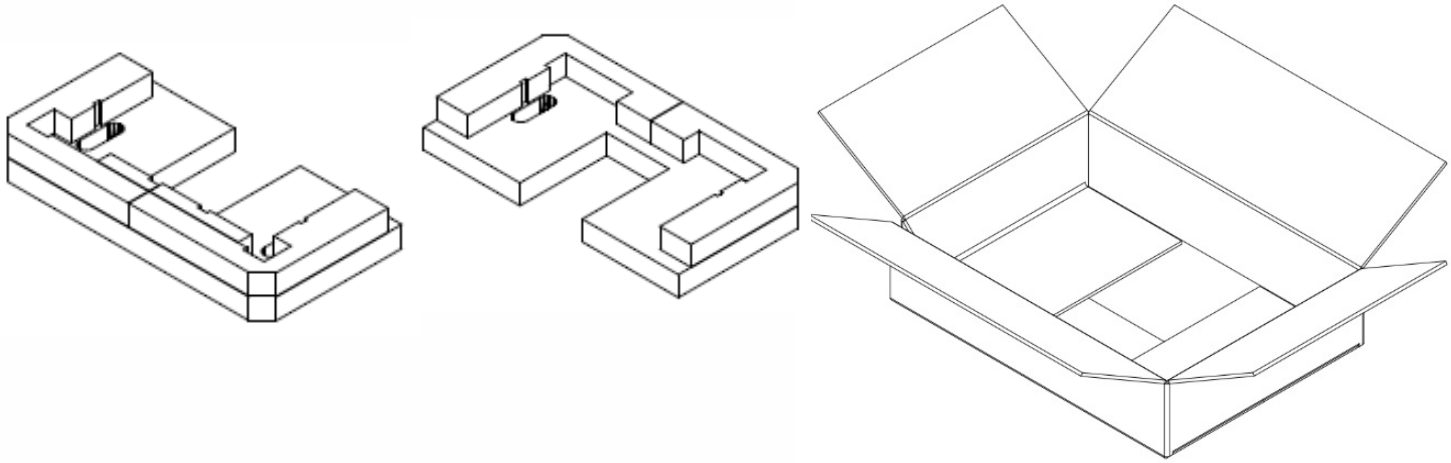

1.2 Accessories Box

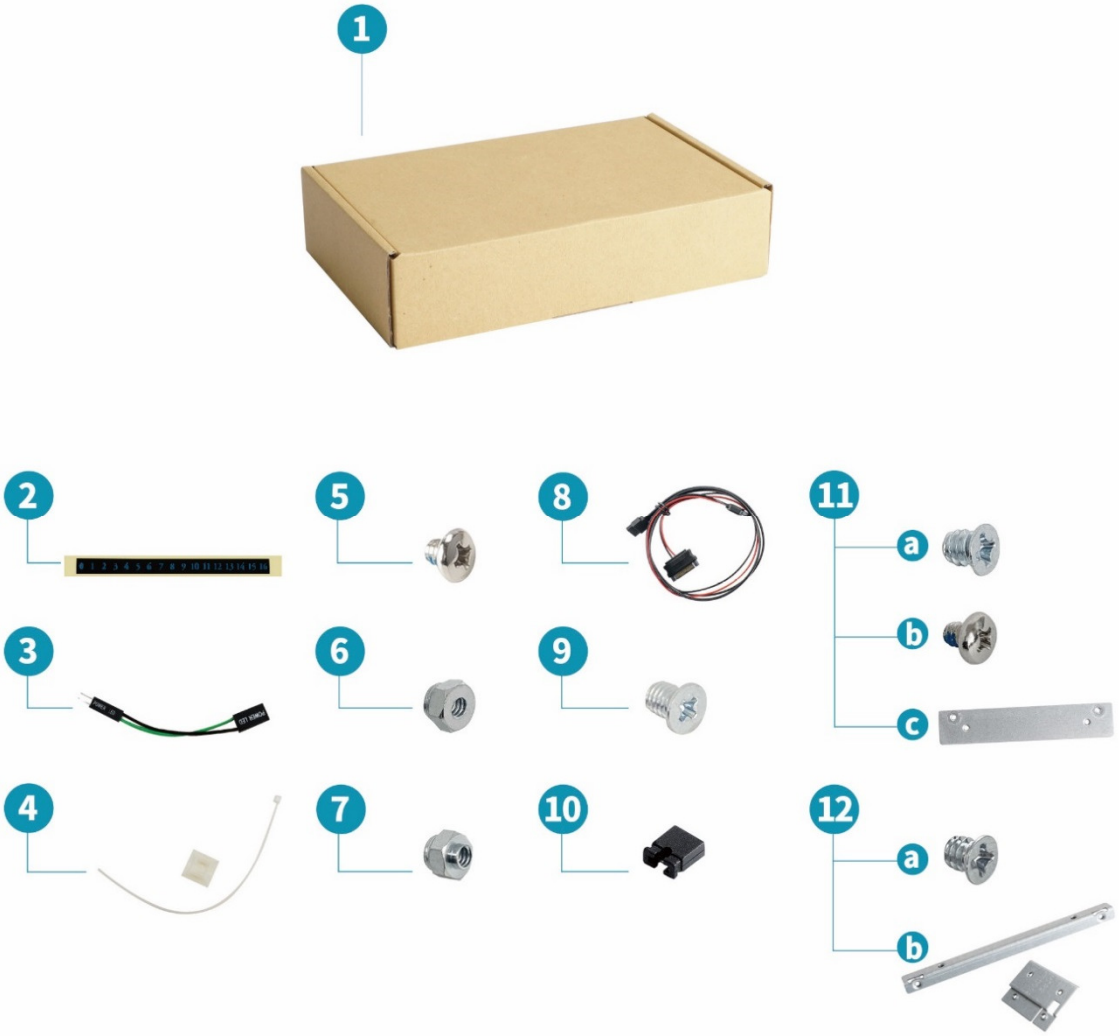

No.	Name	No.	Name
1	Accessories Box	7	Solderable Standoffs x 2
2	Label x 1	8	6 + 7-pin SATA to SATA Device x 1
3	Power LED 3-pin to 2-pin Adapter x 1	9	2.5" SSD screws x 24
4	Cable Ties and Mounts x 5	10	Backplane Jumper x 1
5	Motherboard Screws x 11	11	**Single Power Supply Accessories** a. Countersunk Flat Head Screws x 2 b. Oval Head Screws x 4 c. Mounting Bracket x 1
6	Motherboard Stand-off Sockets x 11	12	**Redundant Power Supply Accessories** a. Screws x 6 b. Mounting Brackets x 2

1.3 General Information

When you open the chassis, it should reflect the diagram's image.

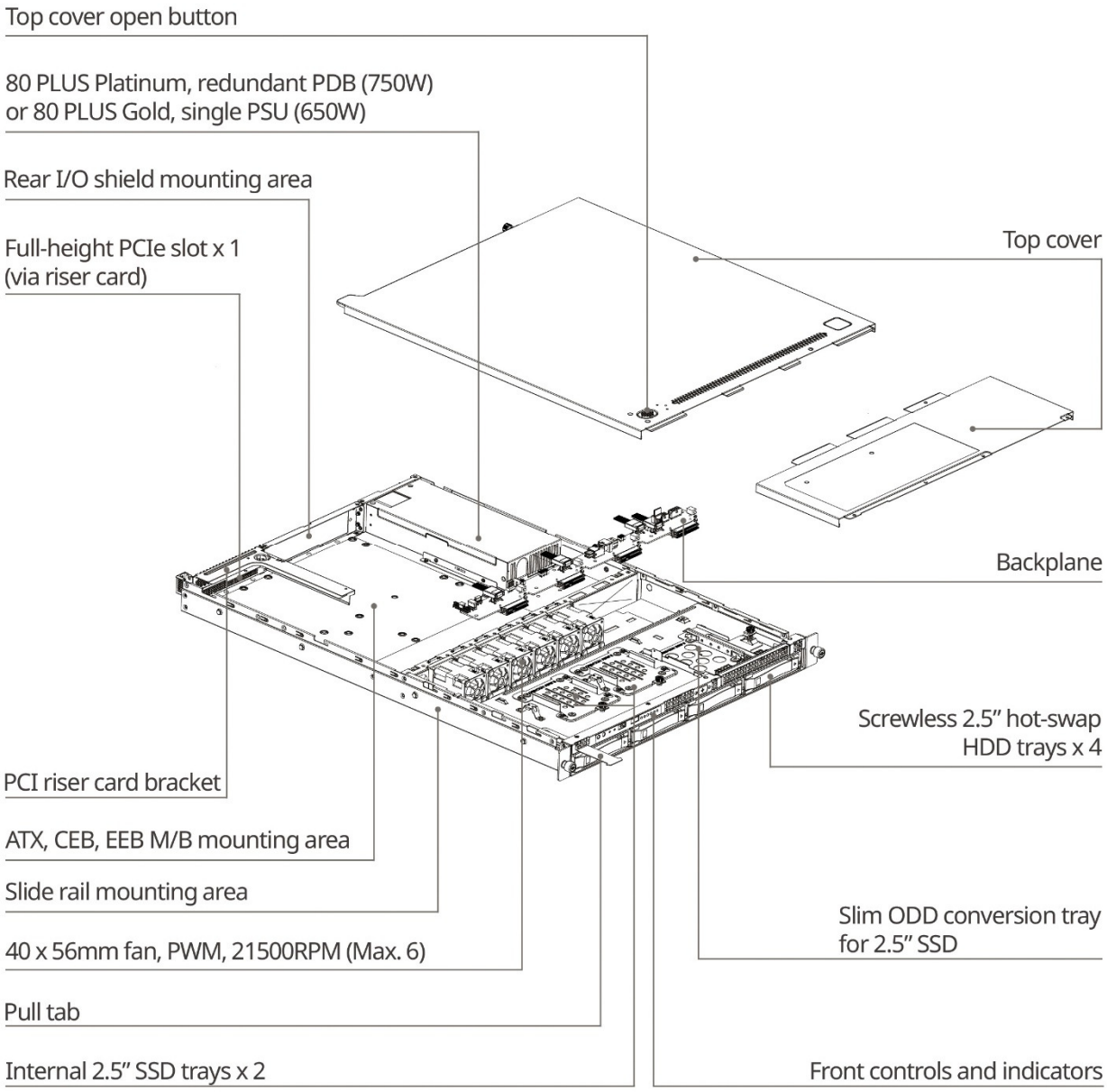

1.3.1 Front Panel Controls and Indicators

The IW-RS104-07 supports 3.5"/2.5" SAS/SATA disk bays x 4 or 3.5"/2.5" NVMe disk bays x 4 in specific areas. The control panel, USB I/O ports and indicators are located on the handles.

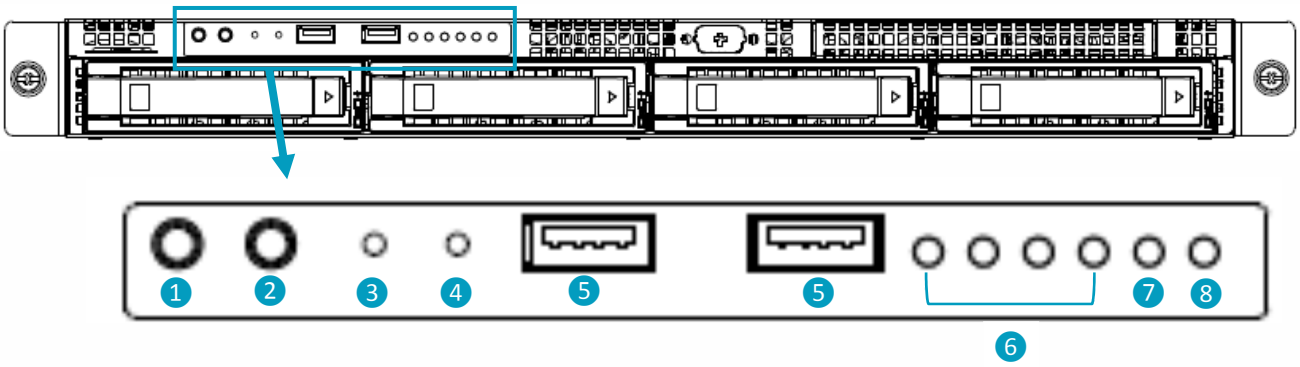

No.	Name	Color	Status	Description
1	Chassis ID Button with LED	Blue	Solid on	Press the button to activate system identification.
2	Power ON/OFF Button with LED	Blue	Solid on	System is powered on.
			Off	System is off.
3	NMI Button	No LED function		Press the button to activate user-defined function.
4	System Reset Button	No LED function		Press the button to activate system reset.
5	USB3.0 Connector	No LED function		USB devices connections.
6	LAN LED (LAN1-LAN4)	Amber	Blinking	Link between system and network.
			Off	No data transmission or receiving is occurring.
7	Hard Disk LED	Green	Blinking	System HDD accessing.
8	System Fail LED	Amber	Solid on	System is faulty.
		Green	Solid on	System works.

1.3.2 Rear Panel Configuration

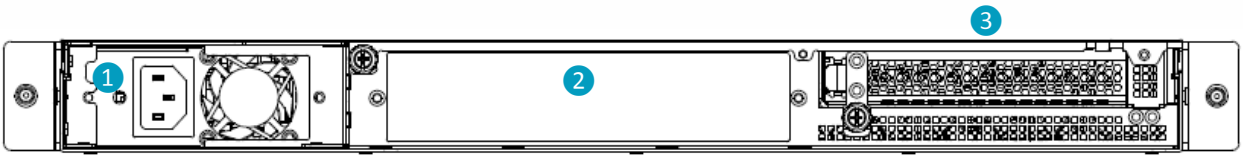

No.	Name	Description
1	Power Supply Window	This window is for installing single PSU, please reference InWin compatibility list to select the compatible models.
2	System I/O (Depends on M/B Specifications)	InWin offers a customized service for 1U I/O shield. For more information, please contact InWin's sales reps.
3	Full-Height PCIe Slot x 1	The slot supports standard high profile cards. The bracket should be removed before using.

2 Hardware Installation

2.1 Motherboard & Expansion Card Installation

Before installing the motherboard, please find the I/O shield from your motherboard package and install it into the system I/O window. If you cannot find the I/O shield, please check with your motherboard vendor, or contact InWin for I/O shield OEM service.

For a quick installation video, please visit 07 Series Motherboard & Expansion Card Installation.

2.2 HDD Tray Installation

The IW-RS104-07 features tool-less trays. Users no longer need to use screws to mount disks, and can swap drives faster.

For a quick installation video, please visit 07 Series HDD Tray Installation.

2.3 Fan Installation

The IW-RS104-07's built-in fan modules feature a tool-less design, which makes it easy to maintain.

For a quick installation video, please visit 07 Series Fan Installation.

2.4 Power Supply Installation

The IW-RS104-07 has an option of single or redundant power supply units.

For a quick installation video, please visit 07 Series Power Supply Installation, 07 Series 1U Single Power Supply Installation or 07 Series 1U Redundant Power Supply Installation.

2.4.1 Power Supply Cable Information

650W Single PSU Cable Information

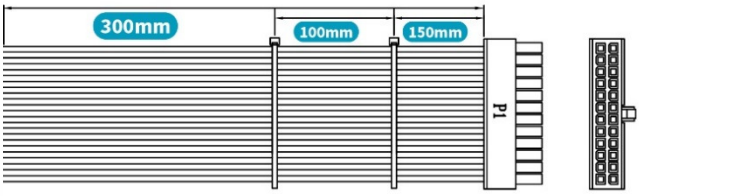

24-Pin Main Power Connector

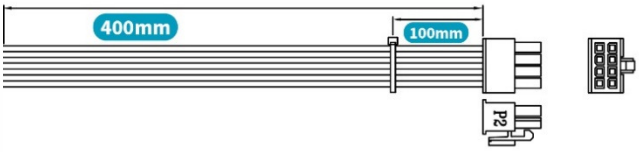

8-Pin CPU

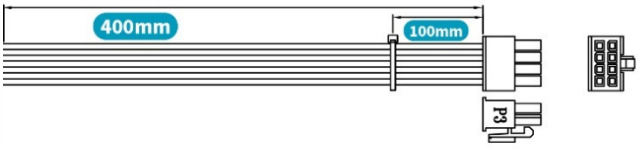

8-Pin CPU

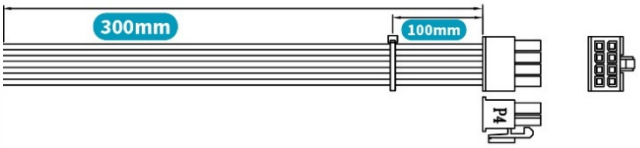

8-Pin Backplane Power

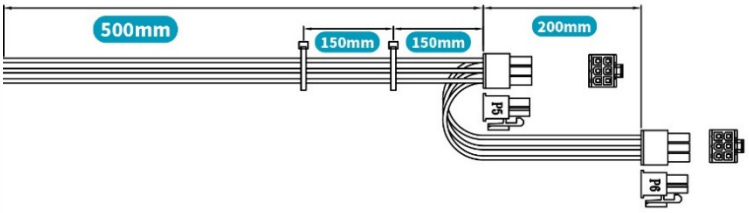

6-Pin Backplane Power

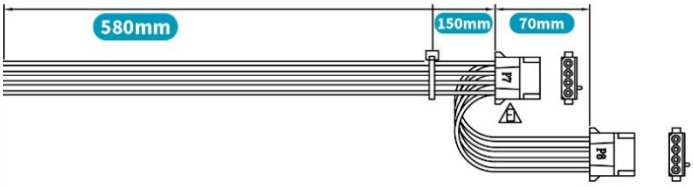

4-Pin Peripheral Power Connector

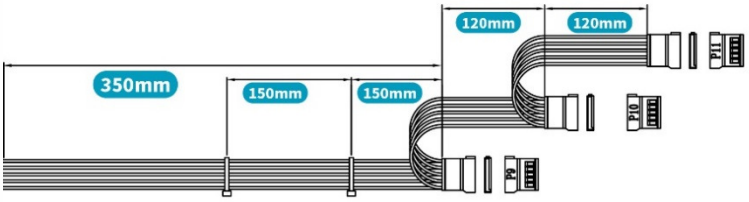

SATA Power

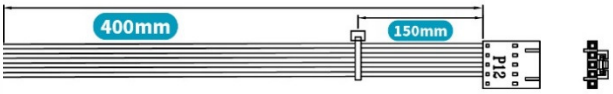

PMBus

Length Unit: mm

750W Redundant PSU Cable Information

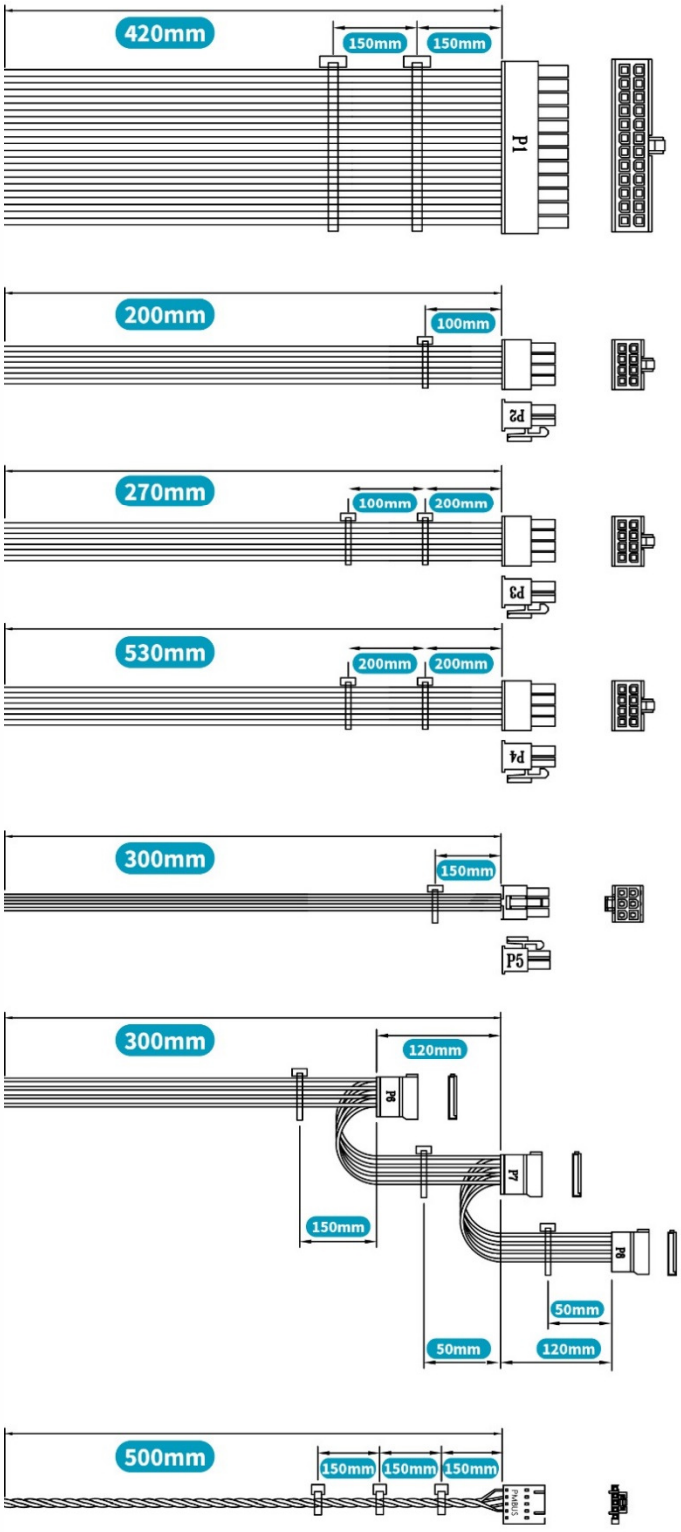

24-Pin Main Power Connector

8-Pin CPU

8-Pin CPU

8-Pin Backplane Power

6-Pin Backplane Power

SATA Power

PMBus

Length Unit: mm

2.5 Internal HDD Installation

The IW-RS104-07 offers 3 x 2.5" internal SSD drive bays, and one of the 2.5" internal SSD drive bays can be replaced with an ODD. These drive bays can be mixed by customers into several combinations.

For a quick installation video, please visit IW-RS104-07 Internal HDD Installation.

2.6 Connecting Cables

InWin backplanes (without Expander) are high-performance and cost-effective solutions for supporting Intel® Xeon Scalable family by adding NVMe support. The passive backplanes support state-of-the-art SAS3 12Gbps HDD/SSD and are also backward compatible with SAS 6Gbps, SATA 6Gps and SATA 3Gps HDD/SSD. Some of the backplanes support NVMe SSDs through either Oculink x 4 or Slimline x 4 connectors.

2.6.1 Connecting Backplane Through SAS Connectors

The InWin IW-RS104-07 needs the SAS cable to connect to the backplane and your motherboard or RAID controller. InWin provides verified SAS cables for installation, please contact InWin sales reps to get more information.

2.6.2 Connecting LED Cable, Front Control Panel and Front USB I/O Ports

As 1.3.1 describes, the InWin IW-RS104-07 has a built-in front control panel and USB access ports. To activate these functions, you should connect the pins to the motherboard. Please refer to the motherboard's user guide to make sure the pin functions and their correct locations before attempting to connect them.

USB 3.0

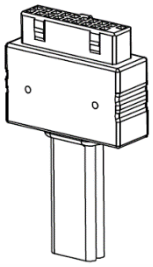

LED Connector

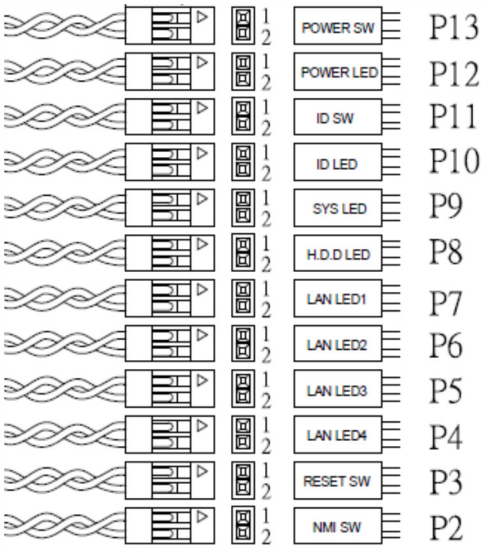

No.	Connector Name	Color	Front I/O Indication
P2	NMI Switch	Black/Brown	NMI Button
P3	Reset Switch	Red/Orange	Power Reset Button with LED
P4	LAN LED 4	Yellow/Green	LAN LED
P5	LAN LED 3	Blue/Purple	LAN LED
P6	LAN LED 2	Gray/White	LAN LED
P7	LAN LED 1	Black/Brown	LAN LED
P8	HDD LED	Red/Orange	HDD Active LED
P9	System LED	Yellow/Green	System Fail LED
P10	ID LED	Blue/Purple	Chassis ID Button with LED
P11	ID Switch	Gray/White	Chassis ID Button with LED
P12	Power LED※	Black/Brown	Power ON/OFF Button with LED
P13	Power Switch	Red/Orange	Power ON/OFF Button with LED
USB	USB 3.0 Connector	Black Flat	USB 3.0

※ *If the motherboard's led power source is a 3-pin type, please use the 2-Pin to 3-Pin convertor adapter from the accessories box to connect.*

2.7 Installing the Slide Rail

The InWin IW-RS104-07 is a rackmount model, which supports EIA-RS310D standard cabinet and chassis racks. InWin provides standard slide rails to allow customers to mount the chassis onto the cabinet.

2.7.1 Identifying the Slide Rail

The slide rail by your order might be different. You can reference the quick installation guide inside the slide rail package and follow the instructions to mount the rail onto your cabinet or chassis rack.

2.7.2 Installing the Slide Rail

Step 1: Release the inner rail from the slide.

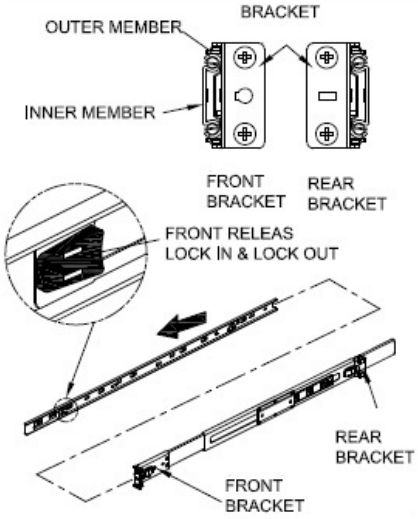

Step 2: Mount the inner rails onto the chassis by the direction which the arrows show.

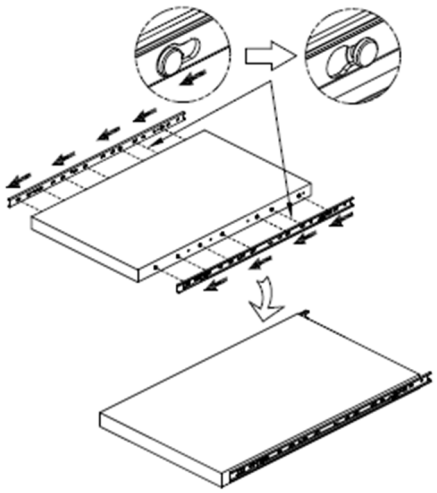

Step 3: Install the outer rails and the brackets onto the rack.

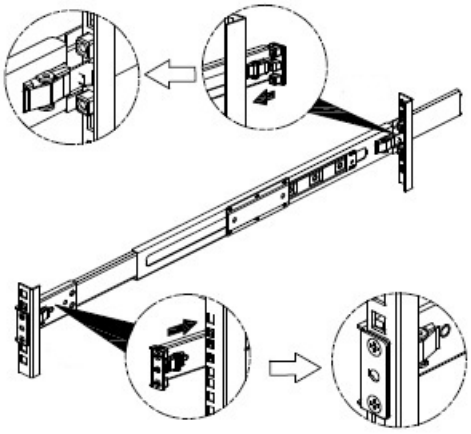

2.7.3 Mounting the chassis onto the cabinet

Step 1: Make sure the ball bearing retainer is at the forefront.

Step 2: Insert the inner rail to the outer rail which has already locked up on the cabinet.

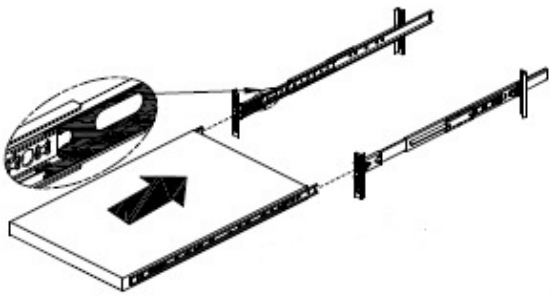

Step 3: Mount the inner rail onto the chassis by the direction which the arrows show on the image.

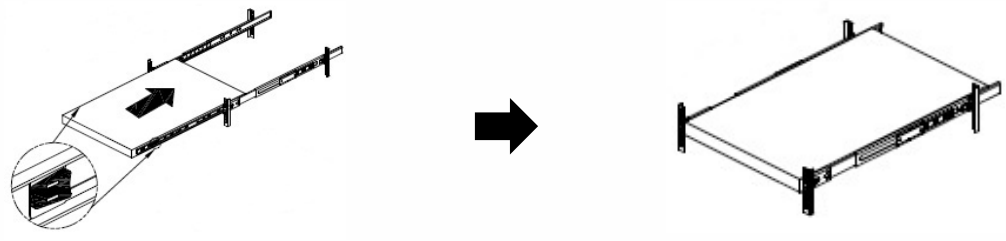

Step 4: Tighten the thumb screws to secure the chassis.

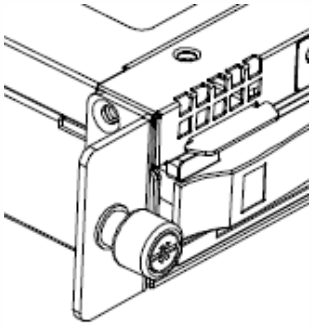

3 Backplane Introduction

The backplane varies by order. Please reference the backplane user guide to complete the installation. The download link is at the download section of each product. Please visit the InWin website: ipc.in-win.com.

SAS3 Backplane:

Top Side

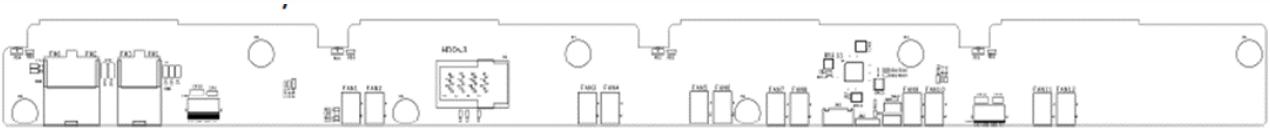

Bottom Side

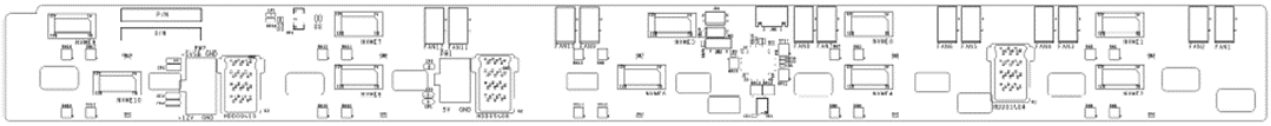

Oculink Backplane:

Top Side

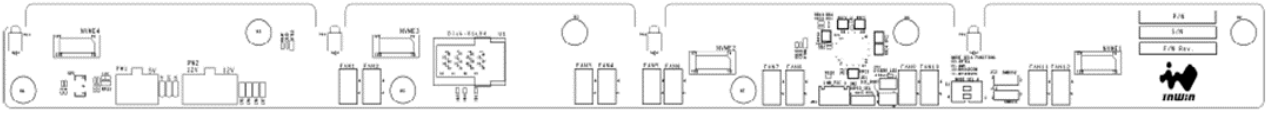

Bottom Side

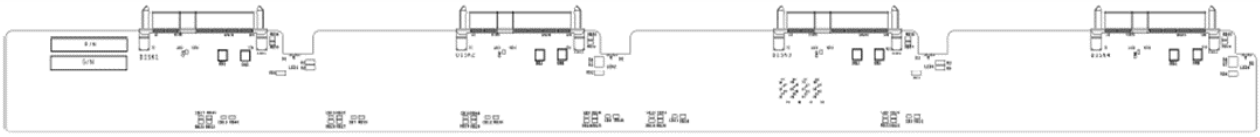

Slimline Backplane:

Top Side

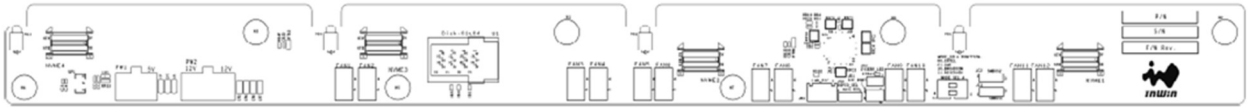

Bottom Side

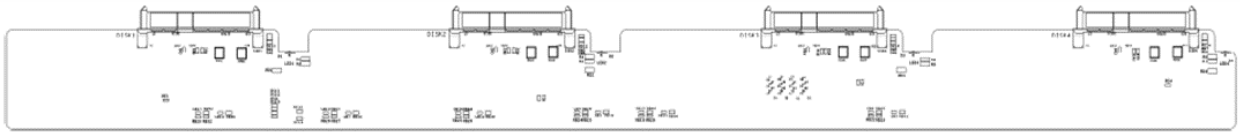

Location	Description
JD1	MCU Programming Header
JM3	Setting Function 1 FAIL LED + 2 FAIL LED –
JM2	Setting Function 1-2 Shunted SGPIO Enabled 2-3 Shunted SGPIO Disabled Not Set Auto
JM1	Pin Function 1 PWM input 2 RPM output 3 GND
FAN1 ~FAN12	Connect to fan modules. The backplane supports up to 12 fan modules.

4 Compatibility Lists

To reach the best performance and avoid system failure, InWin strongly recommends customers to choose the components from InWin's compatibility list. All the components are tested in InWin's lab, and assured the components are compatible with InWin's chassis. You can download the latest updated device compatibility list from InWin's website: ipc.in-win.com.

5 Q & A

a. What is the function of the backplane?

A: The backplane is the bridge which connects the hard drives and exports the signal to the motherboard. Also, the backplane provides the LED signals indicating the status of the hard drives, and alarming when the system temperature is abnormal.

b. Does the backplane support 6Gb SAS?

A: The InWin IW-RS104-07 is accommodated with 12Gb SAS backplane by default. The 12Gb SAS connector interface (SFF-8643) is not compatible with 6Gb SAS. InWin provides OEM/ODM services, so customers may contact their local InWin sales reps for customization.

c. Does the chassis support 3.5", 2.5", SAS and SATA drives? Can I mix the different types of drives in an enclosure?

A: The InWin IW-RS104-07 supports both 3.5" and 2.5" form factor's SAS/SATA disks. It allows different types of disks to work together in an enclosure. Yet, to reach the best performance, we recommend following the motherboard or RAID controller vendors' instructions.

d. Does the chassis support SSDs or flash NVMe drives?

A: SAS/SATA and NVMe SSD connections can be attached to the InWin IW-RS104-07. We recommend customers refer to InWin's compatibility list to confirm if the SSDs are listed, or please contact InWin's sales reps for better reference.

e. If I don't need the front cover, can I have the standard handle?

A: The InWin IW-RS104-07 supports both the standard handle and the bezel handle. If you would like your chassis with a standard metal handle, please contact your local reps to purchase the bezel package for replacement.

f. Does the chassis support mirrored OS disks?

A: The IW-RS104-07 model supports at least two 2.5" internal HDDs. Also, the position of the ODD can be substituted with 1pcs 2.5" HDD. Customers can configure these 3 x 2.5" HDDs on the chassis according to their needs. Yet, the disk mirroring is defined by your motherboard or your RAID 1 controller card. Check the vendor's guide to mirror your OS disks.

g. Can it support small form factor motherboards such as M-ATX and Mini-ITX?

A: The InWin IW-RS104-07 supports motherboards that range from Mini-ITX to EEB. Unless you would like to mount a customized motherboard which will not meet Intel's standard, you will need to contact InWin's partners or sales reps for customization services.

h. Do I need a RAID controller card to connect the backplane?

A: If you would like to construct a solid hardware RAID system, it is required. However, whether you should use the RAID controller card or not depends on your purpose and budget. We recommend discussing with InWin's channel partners for their suggestions.

i. Where can I buy the SAS cable?

A: The 12Gb SAS to 4 SATA or 12Gb SAS to 6Gb SAS are standard cables that you can easily buy from many vendors. You can buy the verified cable from InWin to eliminate compatibility issues.

6 Technical Support

If you need help with installation or troubleshooting, you can contact your local InWin sales reps, or send an e-mail to InWin's local contacts for technical assistance.