IW-RS112-08

1U NVMe Hybrid Storage Server

User Manual

PREFACE

Thank you for choosing the InWin IW-RS112-08 storage server. This manual is written for system technicians who are responsible for installation, managing and repairing this server chassis. This document provides an overview of all the features of the chassis, a list of accessories or other components you may need to finish the installation and instructions on adding and removing components in the InWin IW-RS112-08. For the latest version of this manual, you may visit InWin's server website.

SAFETY INFORMATION

To ensure a safe and smooth operation of your InWin IW-RS112-08, it is essential that you choose an appropriate location for the system, provide an appropriate operating environment and supply an adequate amount of power for all components of the system. As you plan for installation, follow the guidelines below to ensure that the system and its environment are safely and appropriately positioned for efficient operation and service. Your system should be installed and serviced only by a qualified technician.

Proper Environment Selection:

The system is designed to operate in a typical office environment:

- The location should be clean, dry and free of airborne particles.
- It should be placed in a well-ventilated room, and away from sources of heat including direct sunlight and radiators.
- It should be kept away from sources of vibration or physical shock.
- The space should be accommodated with a properly grounded wall outlet, and with sufficient space to access the power supply cords.
- The operating environment temperature should be around 0°C to 40°C (32°F to 104°F).

Heed Safety Instructions:

Before working with InWin IPC/storage/SMB server products, we strongly recommend you use this guide as a reference and follow the safety instructions. The instructions in this manual will help you ensure and maintain compliance with existing product certifications and approvals. Follow the described, regulated components mentioned in this manual. Use of non-UL listing products or other regulators may not comply with product regulations in the region(s) in which the product is sold.

System Power On/Off:

The power button DOES NOT totally turn off the system AC power. To remove the power of the system, you must unplug the AC power cord from the outlet or the system's power supply units. Make sure the power cord is unplugged before you open the chassis, add or remove any components.

Hazardous Conditions, Devices and Cables:

Hazardous electrical conditions can be present on/in power supply units and their cables. Disconnect the power cord and any other devices attached to the server before opening the case. Failing to follow safety procedures will increase the risk of personal injury or equipment damage.

Electrostatic Discharge (ESD) and ESD Protection:

In most cases, ESD may damage disk drives, electronic boards and other parts. We recommend that you conduct installation only at an ESD free space. If not possible, perform ESD protection protocol by wearing anti-static wrist straps attached to the ground on any unpainted metal surface on your server during operation.

Installing or Removing Jumpers:

A jumper is a short length conductor used to close, open or bypass part of an electronic circuit. Jumpers on InWin backplanes have a small tab on top that you can pick up with your fingertips. Grip the jumper carefully and plug the jumper to cover the jumper pins on the backplane. Once you need to remove the jumper, grip the jumper and carefully pull without squeezing.

CAUTION

To avoid damage and maintain your safety, please read the following terms listed below:

1. Do not populate hard drives and turn on the power until the system has stabilized. Make sure hard drives and other components are properly connected before turning on the system.
2. Tighten or loosen all screws with a screwdriver.
3. Apply the correct screws packed in the accessories box.
4. For your safety, please have at least two people lift and install the unit in its designated area.
5. Before mounting the unit to the cabinet, make sure the rail is installed correctly.
6. When installing and removing any module or part, please use the handles.

1 Product Introduction

1.1 Box Contents

When you open the IW-RS112-08 box, the contents should include following:

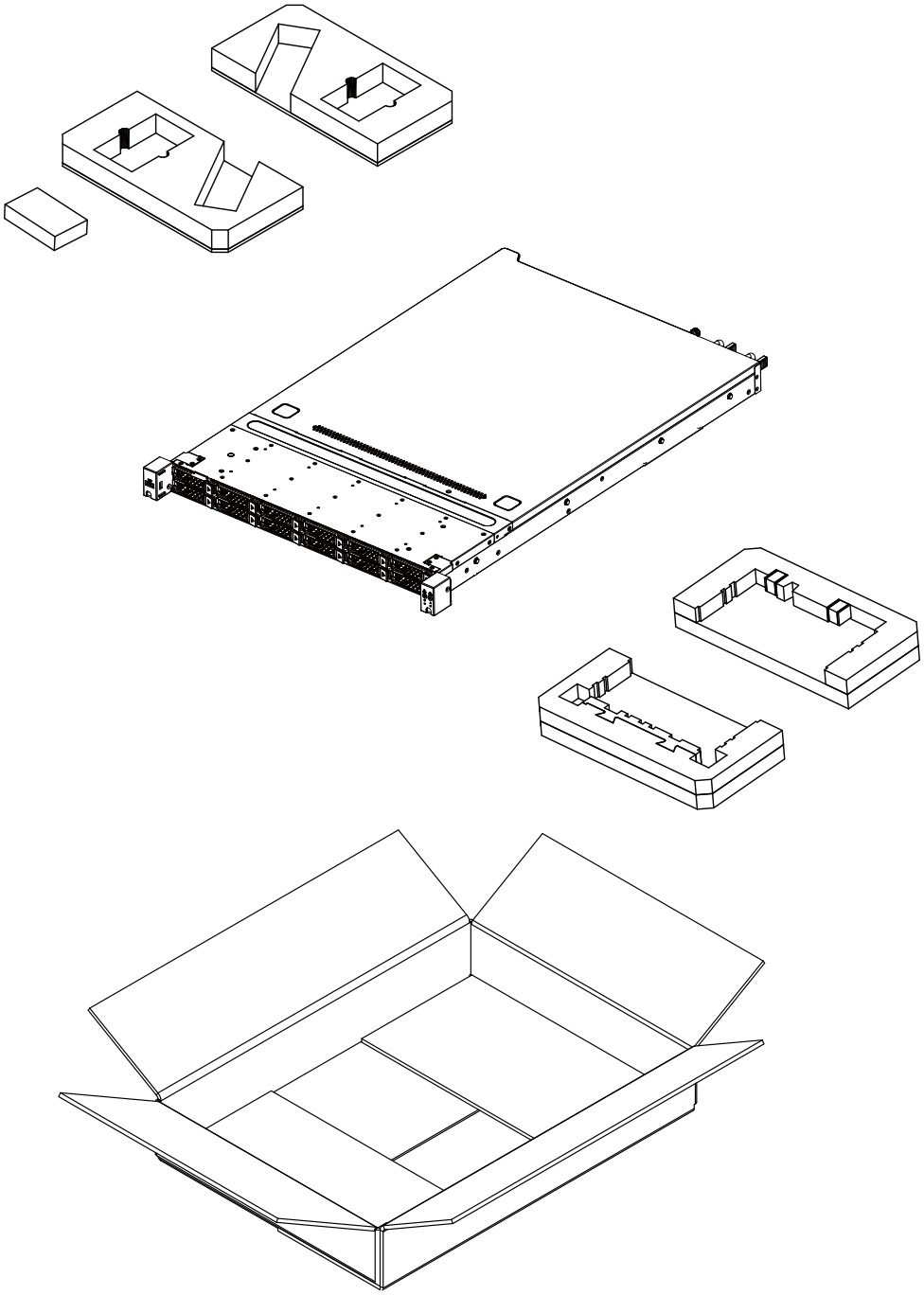

1.2 Accessories Box

1

2

3

4

5

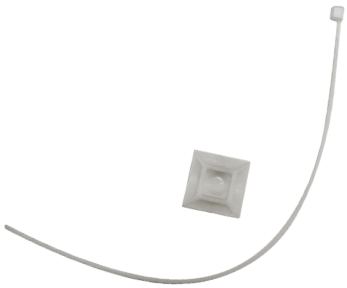

6

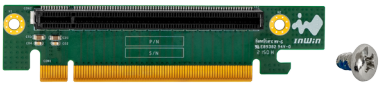

No.	Item	No.	Item
1	Motherboard Screws x 11	4	Power LED 3-pin to 2-pin Adapter x 1
2	Motherboard Stand-off Sockets x 11	5	Cable Ties and Mounts x 5
3	Backplane Jumper x 1	6	Riser Card Screws x 2 PCIe Gen4x16 Riser Card, Left-facing 90 Degree Design x 1

1.3 General Information

When you open the chassis, it should reflect the diagram's image.

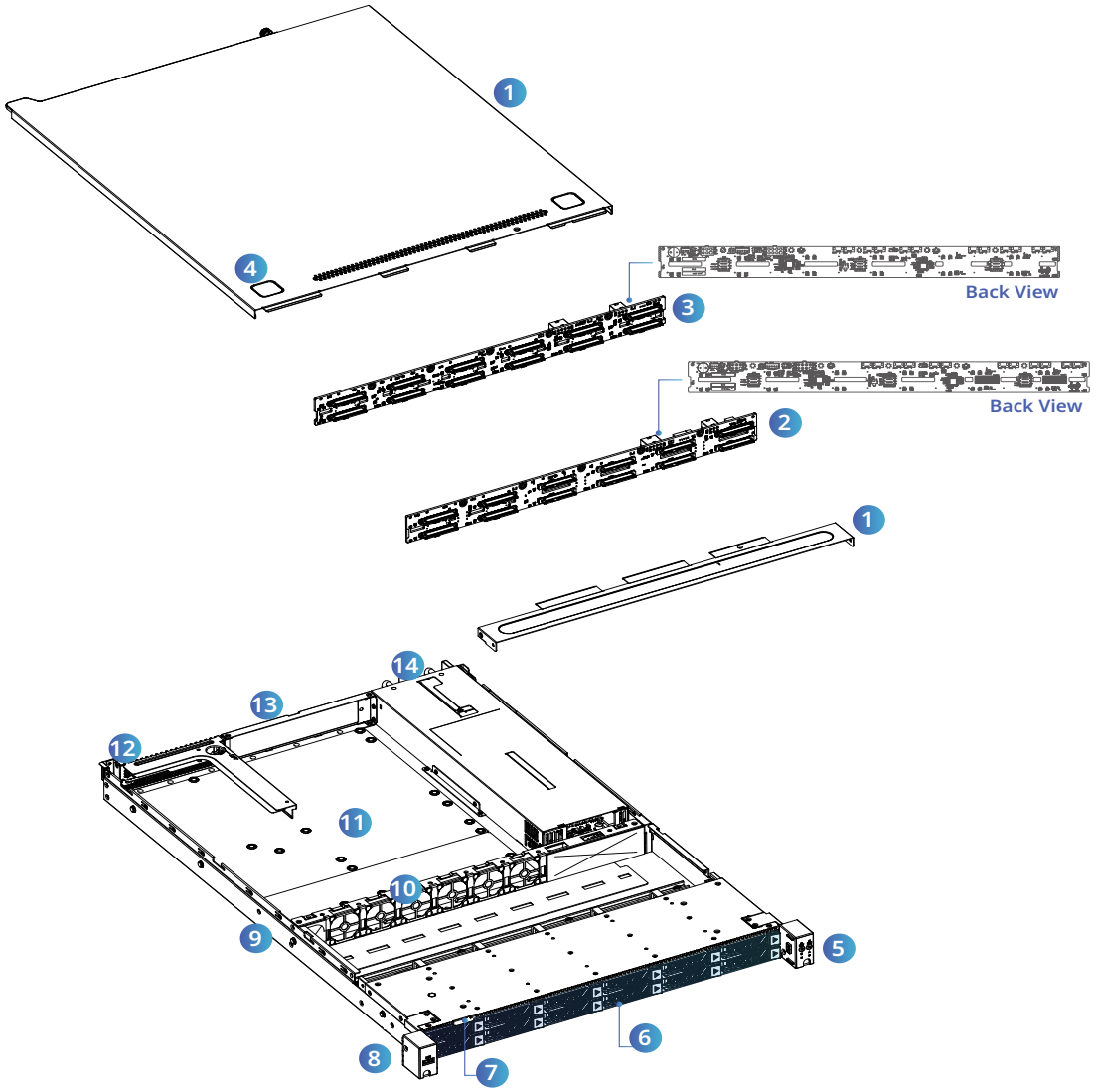

1	Top cover	**8**	USB 3.0 x 1
2	Backplane Type-1 Mini-SAS HD & Slimline	**9**	Slide rail mounting area
3	Backplane Type-2 Mini-SAS HD	**10**	40 x 56mm PWM easy-swap fans x 6
4	Top cover open rubber	**11**	ATX, CEB, EEB M/B mounting area
5	Front controls and indicator	**12**	Full-high PCI slot x 1
6	2.5" hot-swap trays x 12	**13**	Rear I/O shield mounting area
7	Pull tab	**14**	750W 80 Plus Platinum, redundant PSU

1.3.1 Front Panel Controls and Indicators

The IW-RS112-08 supports maximum 4 x hot-swappable 2.5" NVMe/SAS/SATA disk bays, and 8 x 2.5" (15mm) drive bays in specific areas. The control panel, USB I/O ports and indicators are located on the handles.

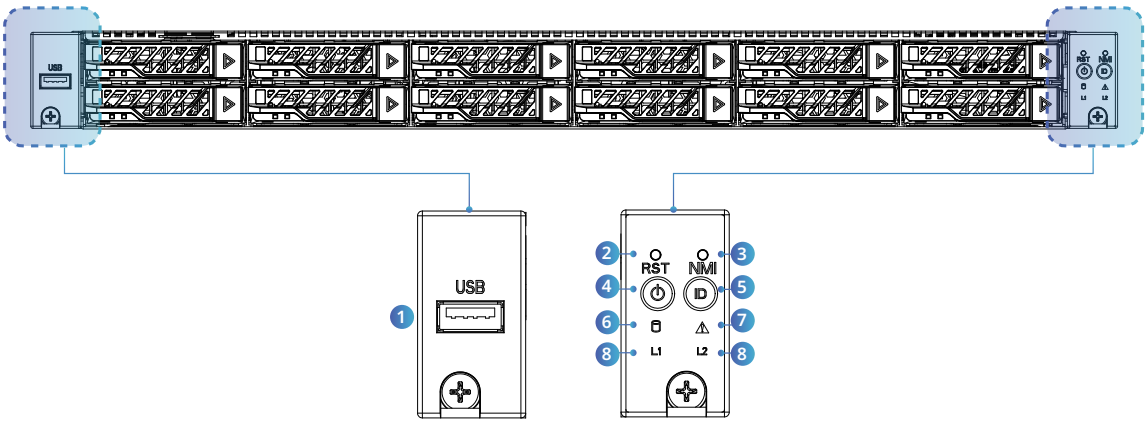

No.	Name	Color	Status	Description
1	USB 3.0 Connector	N/A	Solid on	USB devices connection.
2	System Reset Button	N/A	Solid on	Press the button to activate system reset.
3	NMI Button	N/A	Solid on	Press the button to activate user-defined function.
4	Power On/Off Button with LED	Green	Solid on	System is powered on.
		N/A	Off	System is off.
5	Chassis ID Button with LED	Blue	Solid on	Press the button to activate system identification.
6	Hard Disk LED	Amber	Blinking	System HDD accessing
7	System Fail LED	Amber	Solid on	System Status (- , +)
		Green	Solid on	System Status (+ , -)
8	LAN LED (LAN1 – LAN2)	Green	Blink	Link between system and network.
		N/A	Off	No data transmission or receiving is occurring.

1.3.2 Rear Panel Configuration

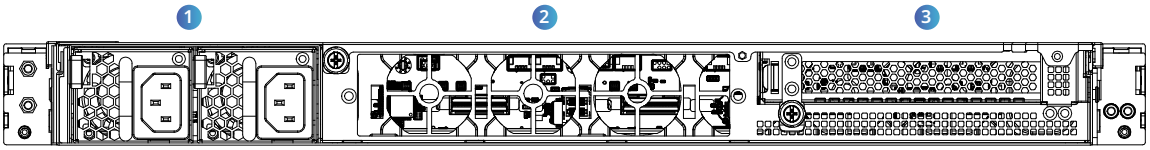

No.	Name	Description
1	Power Supply Window	This window is for installing 1U Redundant PSU, please reference InWin compatibility list to select the compatible models.
2	System I/O (Depends on M/B Specifications)	InWin offers a customized service for 1U I/O shield. For more Information, please contact InWin's sales reps.
3	Full-Height PCIe Slot x 1	The slot supports standard high profile cards. The bracket should be removed before using.

2 Hardware Installation

2.1 Motherboard & Expansion Card Installation

Before installing the motherboard, please find the I/O shield from your motherboard package and install it into the system I/O window. If you cannot find the I/O shield, please check with your motherboard vendor, or contact InWin for I/O shield OEM service.

2.2 HDD Tray Installation

The IW-RS112-08 features tool-less trays. Users no longer need to use screws to mount disks, and can swap drives faster.

2.3 Fan Installation

The IW-RS112-08's built-in fan modules feature a tool-less design, which makes it easy to maintain.

2.4 Power Supply Installation

The IW-RS112-08 has an option of redundant power supply units. Users can select power supply according to the environment's requirements.

2.4.1 Power Supply Cable Information

750W Redundant PSU Cable Information

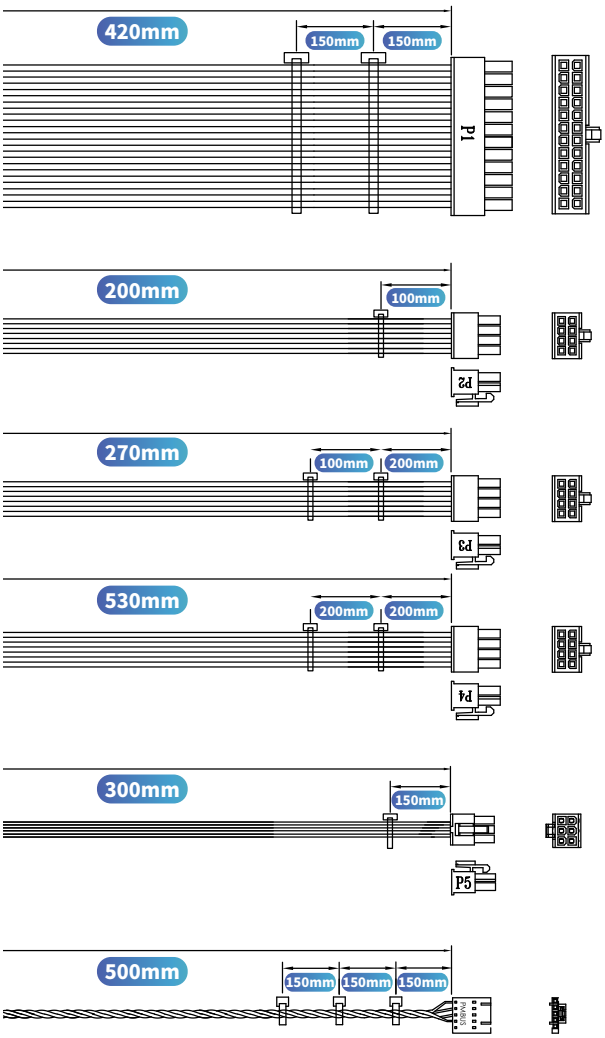

24-Pin Main Power Connector

8-Pin CPU

8-Pin CPU

8-Pin Backplane Power

6-Pin Backplane Power

PMBus

2.5 Connecting Cables

Connecting LED Cable, Front Control Panel and Front USB I/O Ports
Refer to your motherboard user guide for pin functions and locations, and then plug the connectors to the pins on the motherboard to activate the functions.

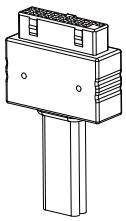

•USB 3.0

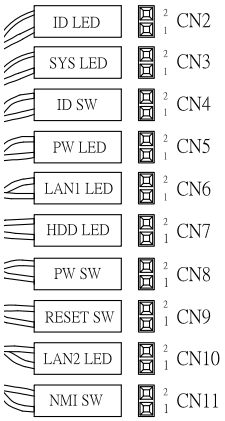

•LED Connector

No.	Connector Name	Abbreviation	Color	Front I/O Indication
CN2	ID LED	ID LED	RED/ BLACK	Chassis ID Button with LED
CN3	SYSTEM LED	SYS LED	RED/ BLACK	System Fail LED
CN4	ID Switch	ID SW	GREEN/ BLACK	Chassis ID Button with LED
CN5	Power LED	PW LED	RED/ BLACK	Power ON/OFF Button with LED
CN6	LAN 1 LED	LAN1 LED	RED/ BLACK	LAN LED
CN7	HDD LED	HDD LED	RED/ BLACK	HDD Active LED
CN8	Power Switch	PW SW	BROWN/ BLACK	Power ON/OFF Button with LED
CN9	Reset Switch	RESET SW	YELLOW/ BLACK	System Reset Button
CN10	LAN 2 LED	LAN2 LED	RED/ BLACK	LAN LED
CN11	NMI Switch	NMI SW	BLUE/ BLACK	NMI Button
	USB 3.0 Connector	None	-	USB 3.0

- If the motherboard's led power source is a 3-pin type, please use the 3-pin to 2-pin adapter from the accessories box to connect.

2.6 Installing the Slide Rail

The IW-RS112-08 is a rackmount model, which supports EIA-RS310D standard cabinets and chassis racks. InWin provides standard slide rails to allow users to mount the chassis onto the cabinets.

Note: Please check rack post type. The rail pre-installed type is for square hole post. If rack post is round hole post, please switch to the suitable screws.

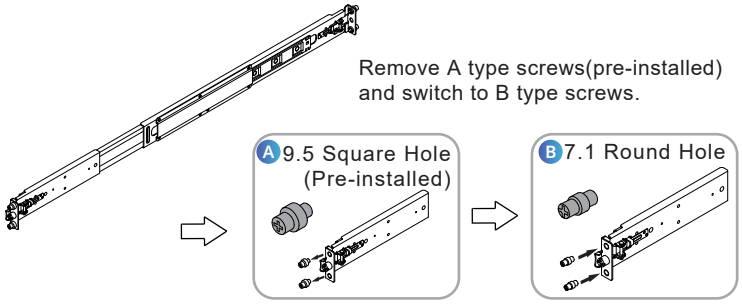

Step 1 - Remove the inner rail.

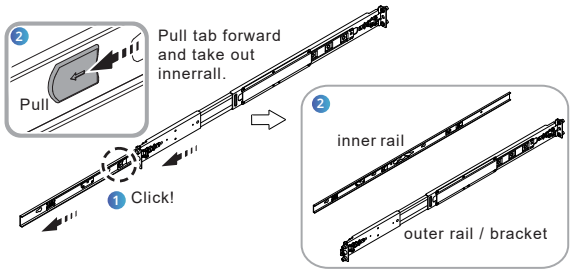

Step 2 - Install the inner rail onto chassis.

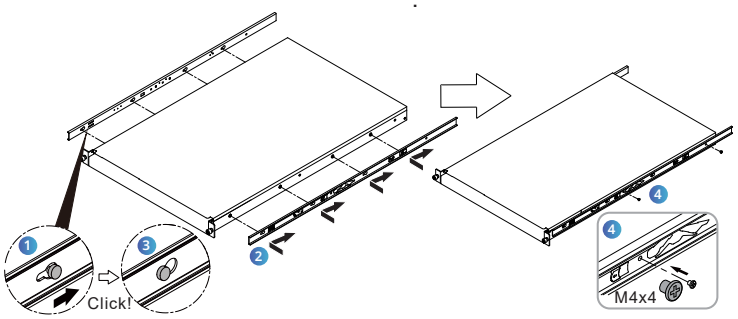

Detach Front Bracket from Rack Post

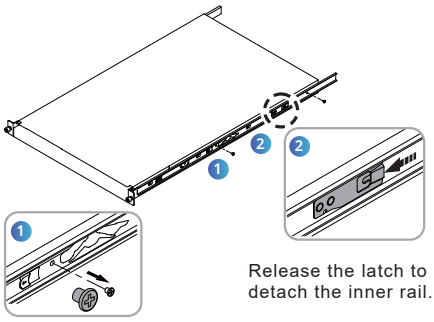

Step 3 - Fix outer rail/bracket assembly to the frame.

Note: Front and rear bracket installation are the same.L.R side of rall are symmetrical.
Please repeat Installation step for the other side.

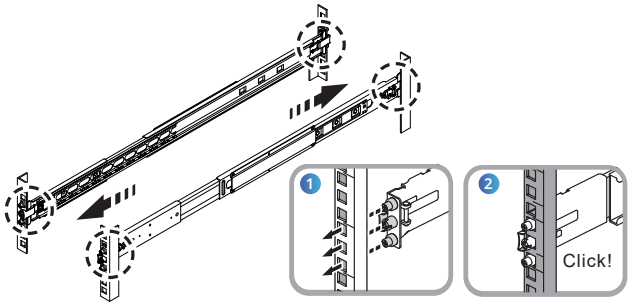

Detach Front Bracket from Rack Post

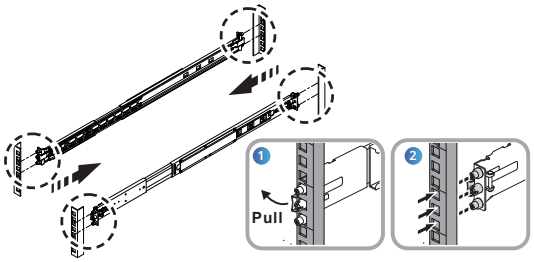

Please adjust the pre-installed front screws order.

default **IW-RS112-08**

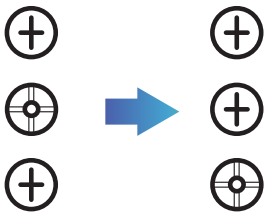

Step 4 - Insert chassis to complete the installation

1. Ensure ball bearing retainer is located at the front of the rall.
2. Insert the chasis into outer ralls.
3. When hlt a stop, please pull / push the release tab on the lnner ralls.
4. 5 Tighten chassis with shlpping screws.

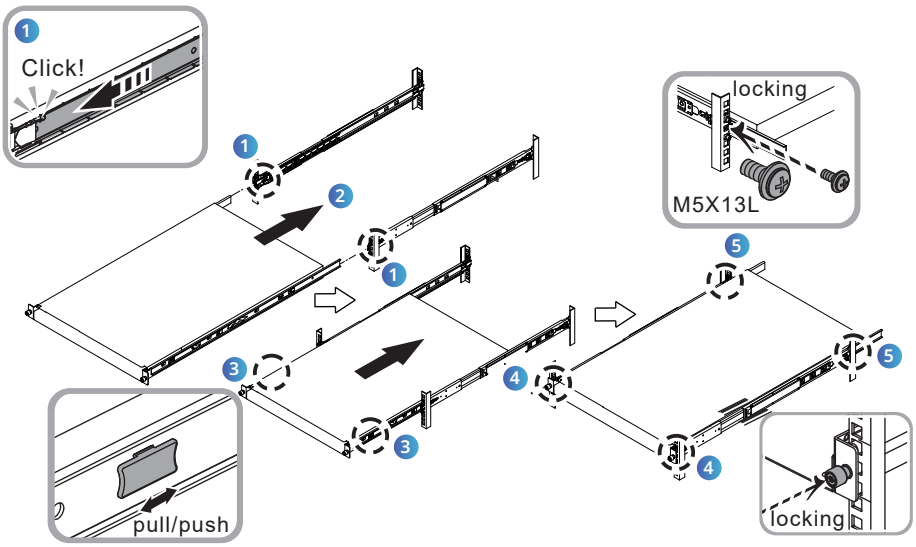

Detach Front Bracket from Rack Post

1. Loosen shlpping screw to pull out chassis.
2.
3. Press the disconnect tab forward to remove chassis.

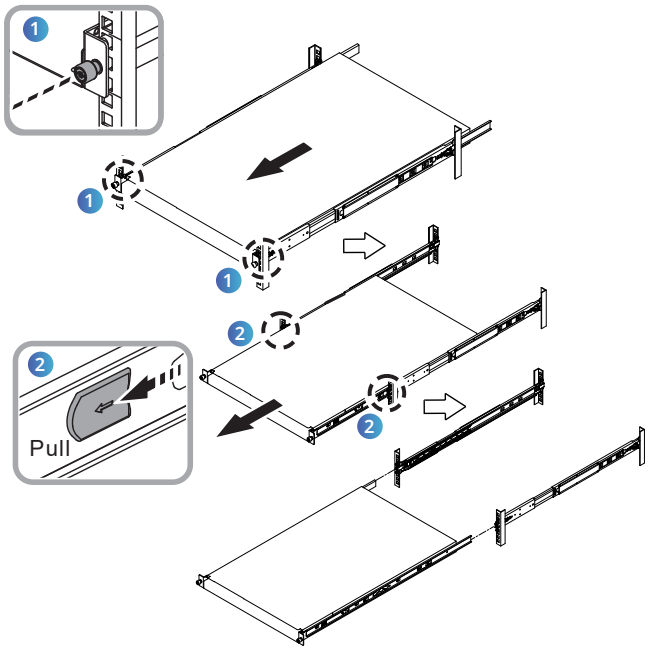

3 Backplane Introduction

The backplane is a high performance economical solution for users who has sufficient SAS host ports on MB or RAID/HBA to accommodate 12 disks in the system.

The hybrid backplane is a 1U in height designed supporting state-of-the-art SAS3 12Gbps HDD/SSD and are also backward compatible with SAS 6Gbps, SATA 6Gps and SATA 3Gps HDD/SSD. The backplane supports 4 pcs of NVMe SSD up to GEN4 through SlimSAS 8i interfaces. The SlimSAS 8i connector could connect to NVMe HBA/RAID or PCIe Retimer Card that supports it.

Basically, the 3 pcs of SFF-8643 MiniSAS HD connectors can support up to 12 SAS/SATA disks. 4 of the disk slots are the so called Hybrid ports that can support U.2/U.3 NVMe SSD via SlimSAS 8i connectors. Please note that the hybrid ports can either support SAS/SATA disk or U.2/U.3 NVMe SSD at a time.

The backplane varies by order. Please reference the backplane user guide to complete the installation. The download link is at the download section of each product. Please visit the InWin website: **ipc.in-win.com**

3.1 Mini-SAS HD Backplane

Host Side

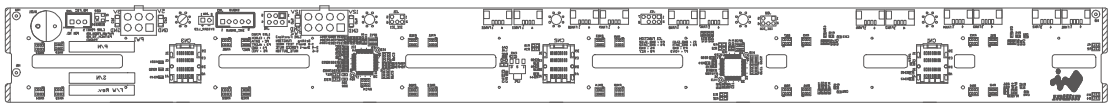

HDD Side

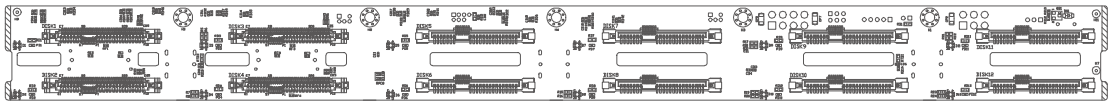

3.2 Mini-SAS HD & SlimLine Backplane

Host Side

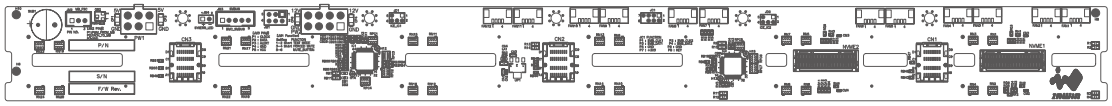

HDD Side

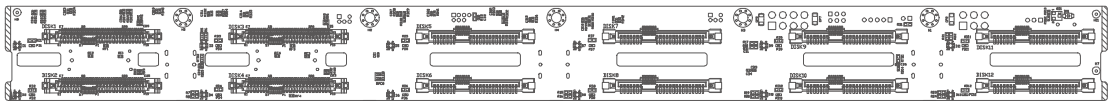

3.3 Backplane Connection

The IW-RS112-08 supports NVMe SSDs through SlimLine 8i connectors, and the backplane is backward compatible with Mini-SAS HD.

3.3.1 SlimLine Backplane Connection

For SlimLine connectors, please use the SFF-8654 cable to connect to the motherboard or RAID/HBA controller card.
Please refer to the backplane user guide for more information.

3.3.2 Mini-SAS HD Backplane Connection

For Mini-SAS HD connector, please use the SFF-8643 cable to connect to the motherboard or RAID/HBA controller card.
Please refer to the backplane user guide for more information.

3.4 Jumper Setting

SlimLine Backplane

Location	Description
JD1/ JD2	Firmware Programming Header
JM2	M/B Fan Speed Control
JM1	Mulit-Function Header
JM3	BMC_SMBUS Connector
JM4	System_Fail_LED Header

Mini-SAS HD & SlimLine Backplane

Location	Description
JD1/ JD2	Firmware Programming Header
JM2	M/B Fan Speed Control
JM1	Multi-Function Header
JM3	BMC_SMBUS_Connector
JM4	System_Fail_LED Header
JC1	VPP Over I2C Header

4 Compatibility Lists

To reach the best performance and avoid system failure, InWin strongly recommends customers to choose the components from InWin's compatibility list. All the components are tested in InWin's lab, and assured the components are compatible with InWin's chassis. You can download the latest updated device compatibility list from InWin's website: **ipc.in-win.com**

5 Technical Support

If you need help with installation or troubleshooting, you can contact your local InWin reps, or send an e-mail to InWin's local contacts for technical assistance.

CONTEMPORARY & INNOVATIVE

ipc.in-win.com

Copyright © In Win Development Inc. All Rights Reserved.